Scale Data:

The U. S. Navy's Standard Missile

by
Evan D. Nau

In December, 1964 General Dynamic's Pomona Division was granted a developmental contract for a new missile system to replace the U.S. Navy's Talos, Terrier, and Tartar surface-to-air missiles. The result has been one of the longest lasting and innovative missile systems in the world today, the Standard Missile (SM).

The Standard Missile 1 (SM-1) became initial operation capable (IOC) in 1969 as the RIM-66 SM-1 medium range (MR), and RIM-67 SM-1 extended range (ER). A ship and air launched ARM version (Anti-Radiation-Missile), the Standard ARM was developed in 1966 and IOC in 1968. (it will be a topic for a future article) The Standard Missile has been produced in two variants, the SM-1 and improved SM-2. Both versions have also been upgraded in sequential "block" improvements.

The Standard Missile airframe design was first introduced as the BT-3 Terrier in 1956. The Standard has continued to be the U.S. Navy's front-line surface to air missile for thirty years and with the continuing block upgrades and the partnership with the Aegis combat system should keep it there for many years to come. This is even more amazing when you look at how much aircraft design has changed in the same lapse of time.

The SM-1 MR and ER provided many firsts when introduced to the fleet yet both were completely compatible with their predecessors the Tartar and Terrier. The SM-1 was the first missile to be completely solid state and all electric control. It contains no hydraulic or pneumatic powered systems. Power for onboard systems is provided by a "one-shot" battery that is activated just prior to launch. This enables a ready-to-action time of one second. It also gives the missile the ability to be stored for long periods of time with a minimum of preventitive and unscheduled maintenance. For propulsion the SM-1 MR uses a dual thrust Mk 56 rocket motor. The ER has a Mk 30 sustainer and tandem Mk 12 booster.The motors were developed by Aerojet/Hercules. Terminal guidance was initially provided through a conical scan, semi-active homing radar with an analog computer. To keep current with a Navy-wide modernization utilizing a shipboard digital fire-control system and three dimensional radar, it has been updated with a mono-pulse, semi-active radar and digital computer system.

The SM-2 was developed for the Aegis Combat System. Aegis's beginning can be traced back to a 1944 R&D study called Bumblebee by the Applied Physics Laboratory of the John Hopkins University. This program was initialized to discover the operability in using guided missiles for use against Kamikazes. Later the program was expanded to include development of hardware and selection of prime contractors in guided missile technology. Though 45 years later the threat of kamikazes is unrealistic, the threat of saturation missile attacks on a surface fleet is very much real.

In 1960 the RIM-50/55 Typhon, an end product of the Bumblebee program, was developed as a medium to long range surface to air missile. It was aborted in 1963 due to support equipment difficulties. In particular, the size and weight of the high mounted shipboard radars. Aegis incorporated many advances from the Typhon weapon system. Most notably a multi-function shipboard phased array radar.

The heart of the Aegis combat system, the SPY-1A phased array radar and UYK-7 tactical computer has the ability to react instantly with nearly unlimited tracking ability. The SPY-1A consist of four fixed, planar arrays mounted on the ships superstructure. Each array (two forward and two aft, 90 degrees apart) contains 4,100 radiating elements controlled by the UYK-7 to produce and steer multiple beams (or "dwells"). When a target is detected an extra number of dwells are assigned to it until range, velocity and course are determined. Each target is evaluated and arranged in priority of threat and then engaged automatically or by manual override. All of this appears to happen instantly to the operator. The SPY-1A sends mid-course instructions to a SM-2 in the form of coded dwells. It also provides target designation data to the four Mk 99 target illumination radars to direct the missile during terminal guidance. Up to eighteen SM-2's can be controlled in the air in addition to four in the terminal phase. Total fire power is approximately thirty-four SM-2 launches per minute. An Aegis equipped Guided Missile Cruiser (CG) can, through a command data link system observe targets

acquired by other ship and aircraft radars of the task force in their CIC (Combat Information Center). It can also command the other shipboard surface to air assets to track and engage those targets.

The SM-2 program was expanded through the fleet upgrade program CG/SM-2, to provide non-Aegis ships with the SM-2's capabilities. It should be noted that though the the Aegis SM-2 and non-Aegis SM-2 missiles are different internally, they are identical externally. The same is also true about the SM-1 and SM-2. Improvements to the non-Aegis SM-2 over the SM-1 are, a mono-pulse semi-active radar, an inertial guidance unit with two-way data link, and higher impulse motors. The mono-pulse radar used for terminal guidance has increased ECCM capability with the ability to filter out a targets attempt to hide behind self-screening jammers. The inertial guidance unit and data-link system are used for mid-course guidance. The data-link receives position update information from the shipboard fire-control system. Atlantic Research provides the SM-2 MR with a new dual thrust, solid fuel Mk 104 rocket motor. The SM-2 ER uses the same Mk 30 sustainer as the SM-1 and a new Mk 70 booster. These improvements have increased the range of the SM-2 MR by over 50% and 100% for the ER over the SM-1.

The SM-1 completed production in 1985 and is still operational. The SM-2 is still under production and will eventually replace the SM-1 in the fleet. Throughout production all variants of the Standard Missile have remained externally identical until recently. The dorsal fin on current production SM-2's is wider towards the radome vice the tail mounted control fins (see photo).

Under development is the SM-2 Block III which speculatively will increase low altitude intercept ability. An Aegis SM-2 ER is also in engineering that will contain refinements to fill the entire Aegis radar envelope, in addition to intercept ability of extremely high altitude targets, and a new tandem booster that in drawings appears to be fin-less. It will also maintain compatibility with the Mk 41 vertical launch system. Other launch platforms for Standard are the Mk 13 single arm launcher and the Mk 26 twin overhead launcher. All launchers are fully automatic.

MODELING THE STANDARD MISSILE

Construction of the missile itself is pretty much straight-forward. For a 1:13.5 scale use a BT-50 for the missile and if you wish to try the booster use a BT-55. A BNC-50K is almost perfect for the nose cone without having to turn one. One suggestion for this size though, is to use bass wood, especially for the dorsal fins. They are not only narrow but also very thin near the tip chord.

Staging a SM ER is a little challenging but well worth the effort. The ground work for air start staging can be found in G.H. Stine's Handbook of Model Rocketry, 5th Edition. Briefly, the whole idea is to harmlessly vent inter-stage pressure until ignition of the sustainer. This is done by use of a stuffer tube in the center of the booster. Vent holes are made in the stuffer tube just aft of the forward centering ring. Pressure is then released either through holes in the engine mount centering rings or by using longitudinal spars for the engine mount. I have used both methods successfully.

The challenging part of construction is the booster's recovery system which is a must. Streamers have been tried with mixed success. It was also the cause of my only failure to ignite the sustainer. Best results have occurred with the use an eight-inch mylar chute anchored by a kevlar line through the extreme forward centering ring of the booster. During flight, the chute is stored in the aft end of the sustainer and is pulled out by the action of staging. More room for chute storage is available by using mini-engines in the sustainer.

This design is very stable and should not require any nose weight even with a mini-engine sustainer (though I suggest string testing anyway). The Standard ER booster is actually a slightly modified Nike M-5 booster that has been used with many sounding rockets. So, it is easy to see that this staging method opens many possibilities in scale modeling.

ACKNOWLEDGMENTS

I would like to thank the Public Affairs staff of General Dynamics, Pomona Division and Vitro Corporation for their unselfish time and effort in assisting me in gathering data for this article.

REFERENCES

Edward L. Korb, Editor, *The World's Missile Systems*, Eighth Edition (Pomona: General Dynamics, 1988)

Bill Gunston, *The Illustrated Encyclopedia of the World's Rockets and Missiles* (New York: Leisure Books, 1979)

David Miller and Chris Miller, *Modern Naval Combat* (New York: Crescent Books, 1986)

Capt. Joseph L. McClane, Jr., USN (Ret.), and Cdr. James L. McClane, USN, "The Ticonderoga Story: Aegis Works," Proceedings, May 1985, pp. 118-129.

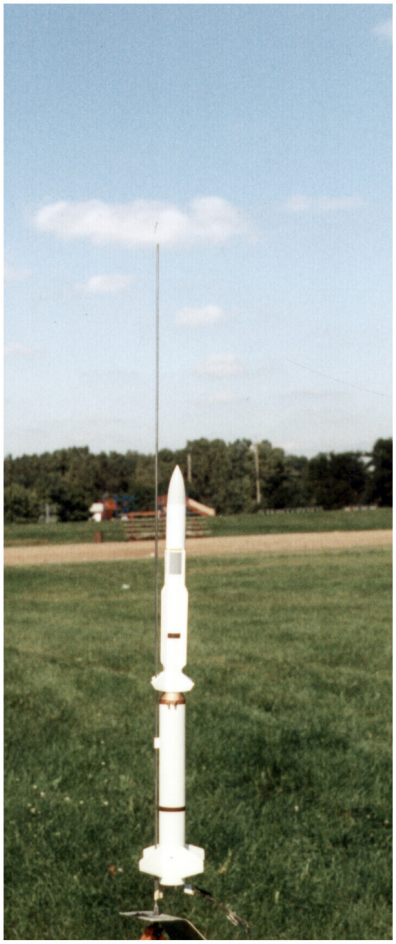

Above: One version of my scale model.

Next Page: A Standard Miissile is launched from a ship. Photo courtesy of General Dynamics.

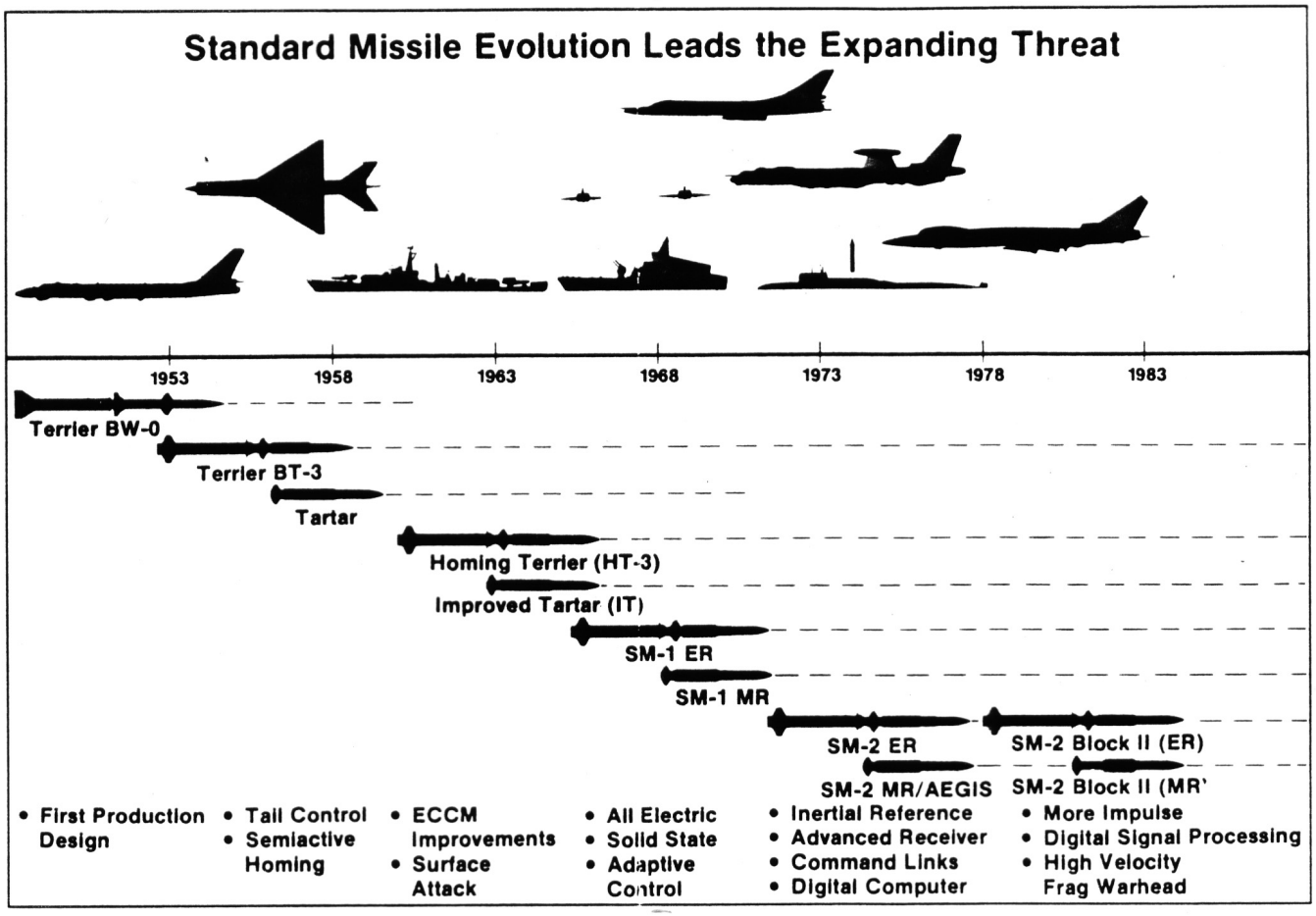
Standard Missile Evolution Leads the Expanding Threat
1953
1958
1963
1968
1973
1978
1983
Terrier BW-0
Terrier BT-3
Tartar
Homing Terrier (HT-3)
Improved Tartar (IT)
SM-1 ER
SM-1 MR
SM-2 ER
SM-2 Block II (ER)
SM-2 MR/AEGIS
SM-2 Block II (MR)
• First Production Design
• Tail Control
• Semiactive Homing
• ECCM Improvements
• Surface Attack
• All Electric
• Solid State
• Adaptive Control
• Inertial Reference
• Advanced Receiver
• Command Links
• Digital Computer
• More Impulse
• Digital Signal Processing
• High Velocity Frag Warhead

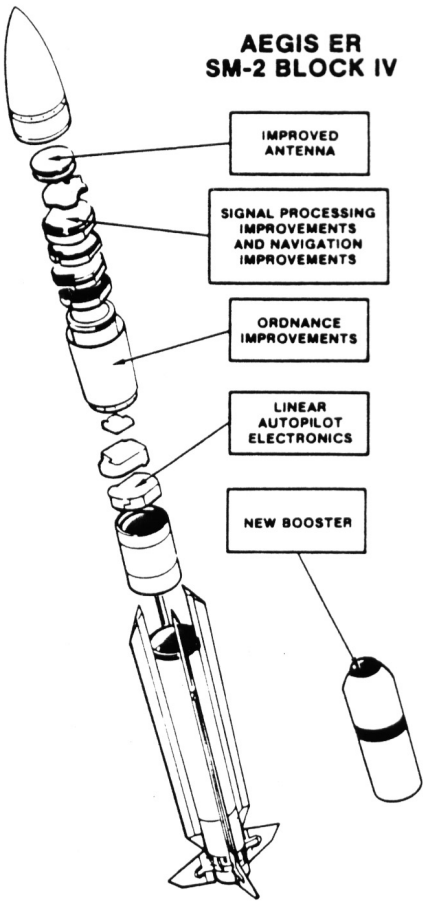
AEGIS ER
SM-2 BLOCK IV
IMPROVED ANTENNA
SIGNAL PROCESSING IMPROVEMENTS AND NAVIGATION IMPROVEMENTS
ORDNANCE IMPROVEMENTS
LINEAR AUTOPILOT ELECTRONICS
NEW BOOSTER

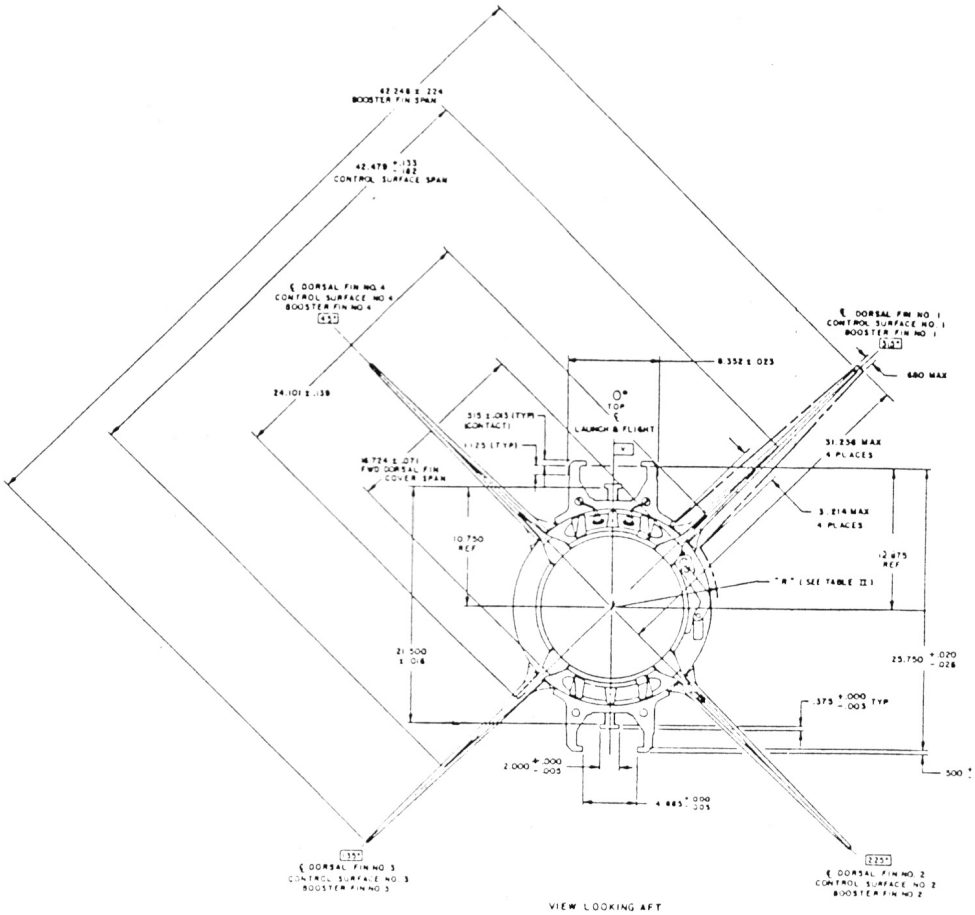
VIEW LOOKING AFT

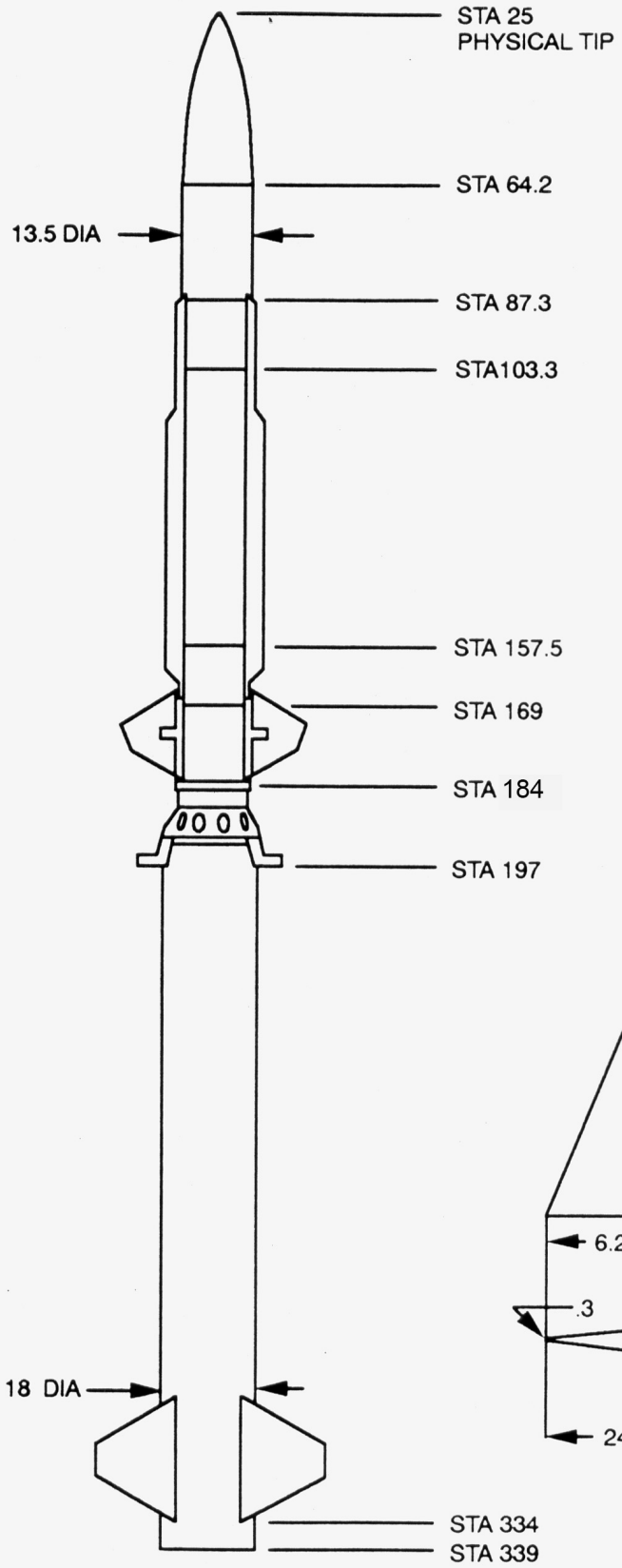

Standard Missile 1 and 2

United States Navy Surface to Air Missile
Manufacturer: General Dynamics,
Pomona Division

Drawn by Evan D. Nau

Sources:
Unclassified Naval Ordnance Drawings,
Vitro Corporation
The World's Missile Systems,Eighth Edition,
August 1988, Edward L. Korb, Editor
Photographs, courtesy General Dynamics

Dimensions in inches

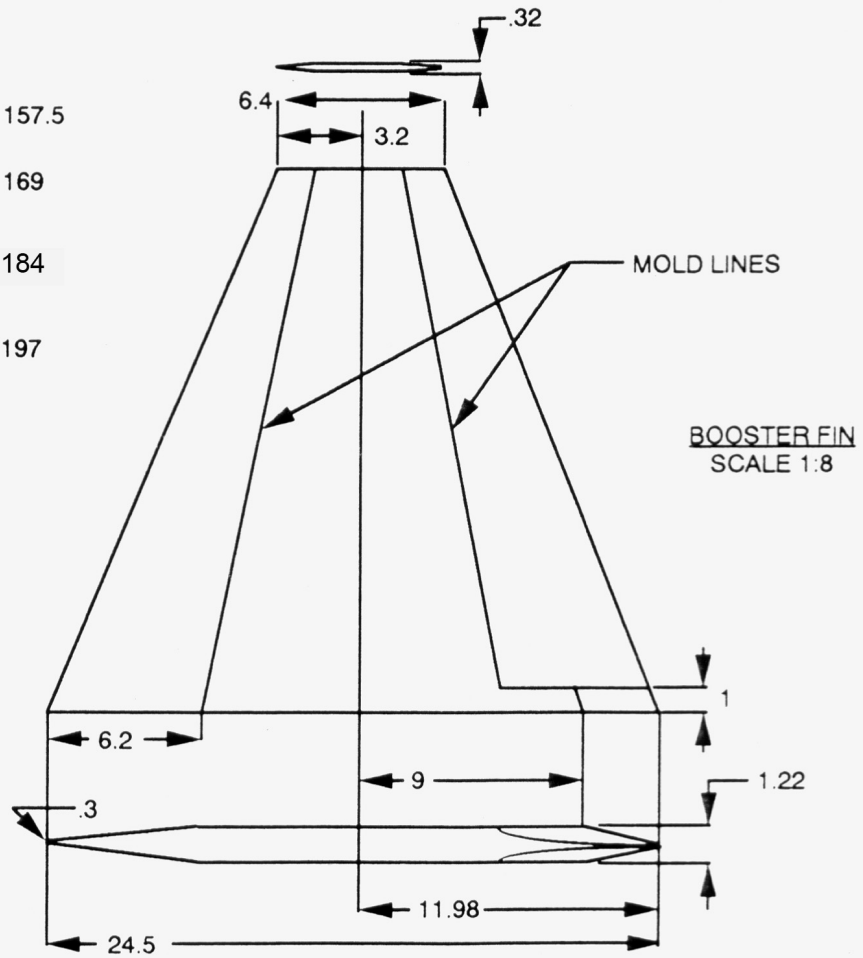

Standard Missile 1 and 2 Color Pattern

United States Navy Surface to Air Missile
Manufacturer: General Dynamics,
Pomona Division

Drawn by Evan D. Nau

Sources:
Unclassified Naval Ordnance Drawings, Vitro Corporation
The World's Missile Systems,Eighth Edition, August 1988, Edward L. Korb, Editor (Color photographs) Courtesy of General Dynamics

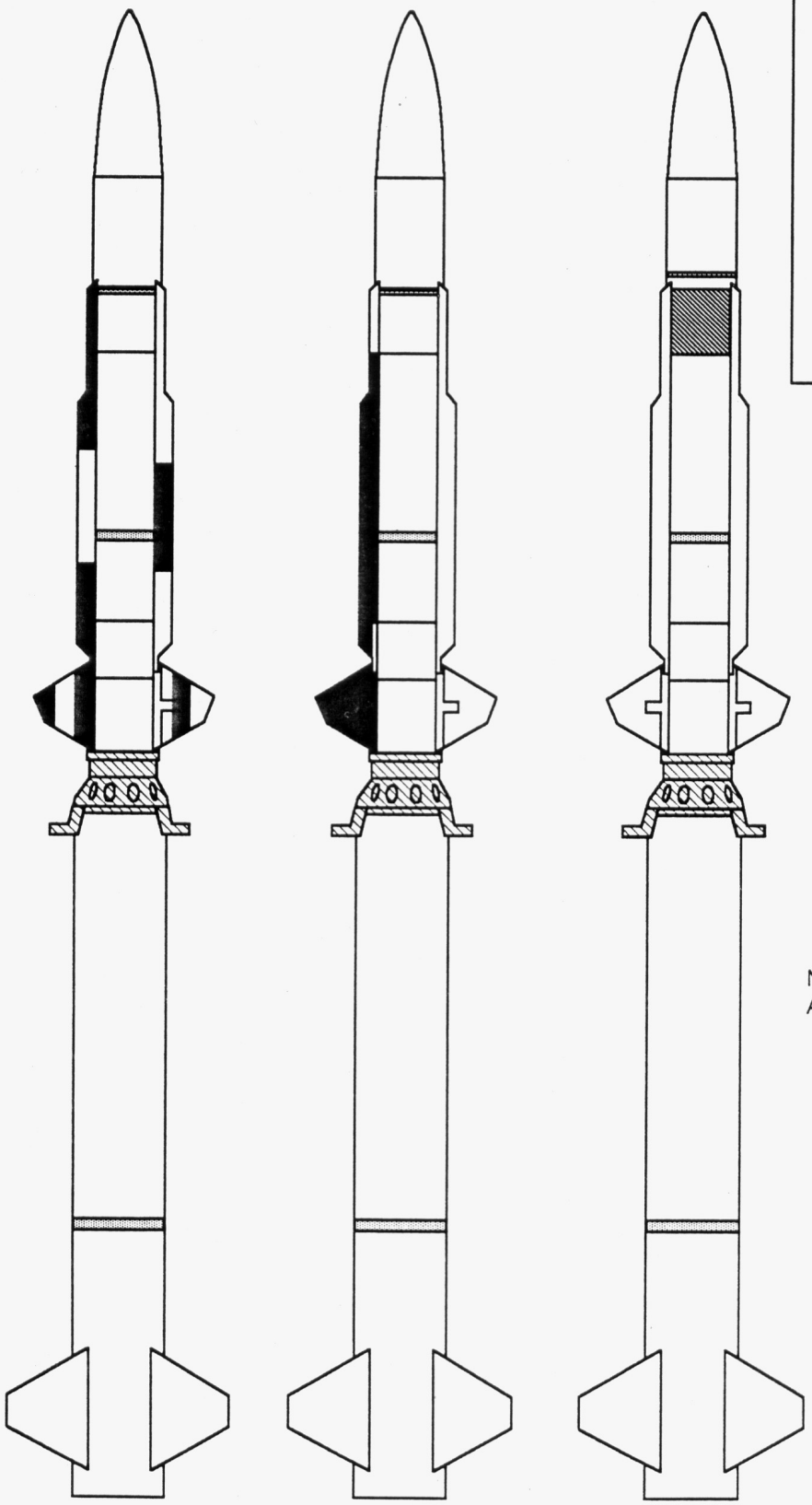

LEFT SIDE

RIGHT SIDE

ALL WHITE

GRAY GUIDANCE SECTION OPTIONAL

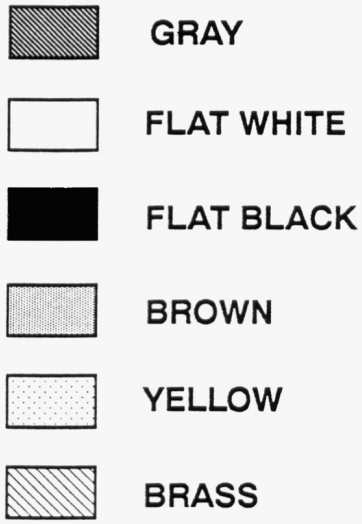

NOTE: COLOR PATTERNS SHOWN ALSO APPLICABLE TO MEDIUM RANGE MISSILE

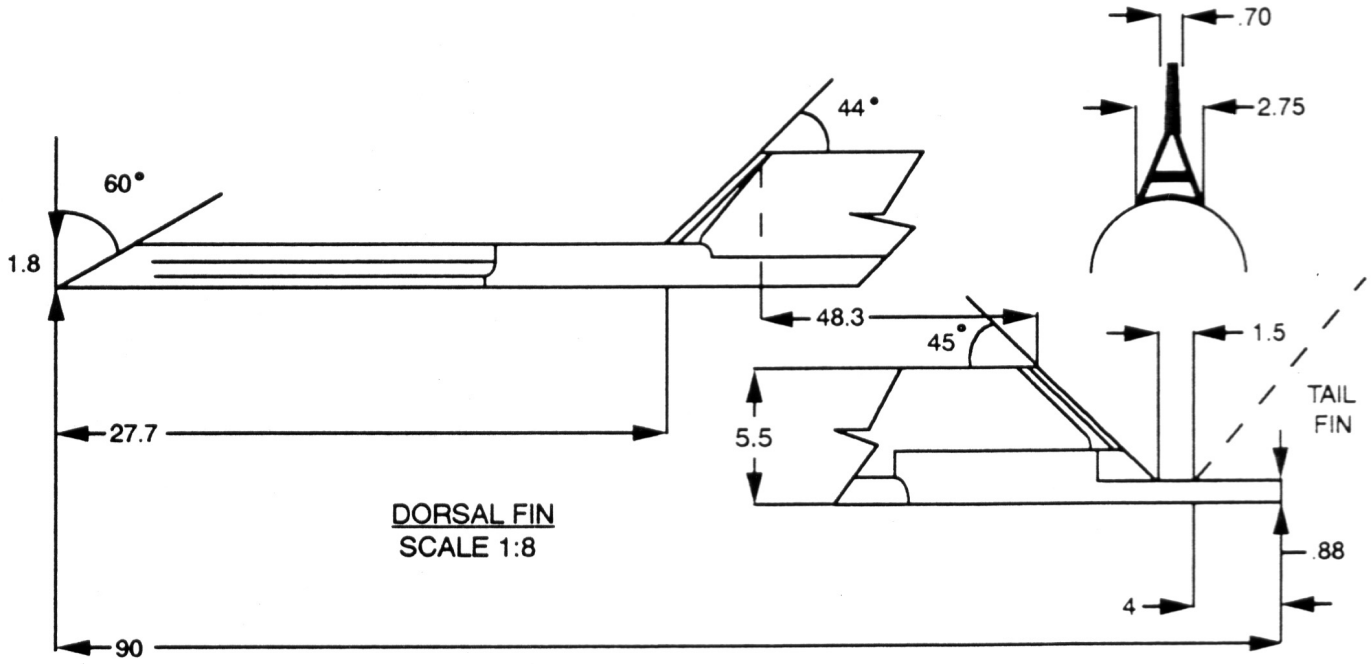

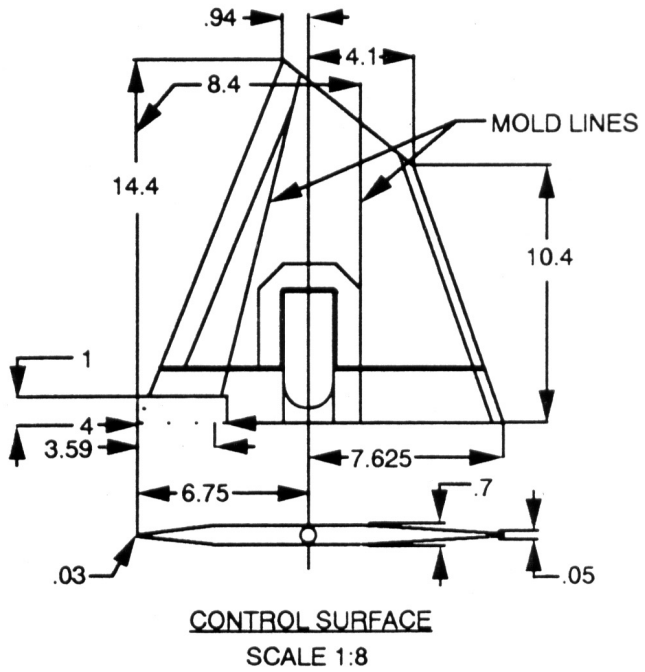

ROUND & SECTION LENGTHS	
DESCRIPTION	TOTAL LENGTH
GUIDANCE SECTION	39.72 MAX
ORDNANCE SECTION	25.04 MAX
AUTOPILOT / BATTERY SECTION	17.14 MAX
ROCKET MOTOR MK 30 MOD 4	81.98 MAX
SPACER, ROCKET MOTOR	11.87 MAX
STEERING CONTROL SECTION	16.34 MAX
MISSILE	159.23 MAX
BOOSTER MK 70 MOD 1	156.72 MAX
ROUND	314.29 MAX