Math 116 — Practice for Exam 1

Generated September 27, 2017

Name: _____

Instructor: _____ Section Number: _____

---

1. This exam has 6 questions. Note that the problems are not of equal difficulty, so you may want to skip over and return to a problem on which you are stuck.
2. Do not separate the pages of the exam. If any pages do become separated, write your name on them and point them out to your instructor when you hand in the exam.
3. Please read the instructions for each individual exercise carefully. One of the skills being tested on this exam is your ability to interpret questions, so instructors will not answer questions about exam problems during the exam.
4. Show an appropriate amount of work (including appropriate explanation) for each exercise so that the graders can see not only the answer but also how you obtained it. Include units in your answers where appropriate.
5. You may use any calculator except a TI-92 (or other calculator with a full alphanumeric keypad). However, you must show work for any calculation which we have learned how to do in this course. You are also allowed two sides of a $3'' \times 5''$ note card.
6. If you use graphs or tables to obtain an answer, be certain to include an explanation and sketch of the graph, and to write out the entries of the table that you use.
7. You must use the methods learned in this course to solve all problems.

Semester	Exam	Problem	Name	Points	Score
Fall 2010	3	2	sewage tank	7	
Winter 2012	1	9	lagoon	11	
Winter 2013	1	4	property values	8	
Winter 2016	1	6	carrots	10	
Fall 2015	1	6	plate	7	
Fall 2016	1	3	fishtank	11	
Total				54	

Recommended time (based on points): 51 minutes

2. [7 points] Deep beneath Dennison Hall lies a large septic tank. It has the shape of a triangular prism with the dimensions depicted below.

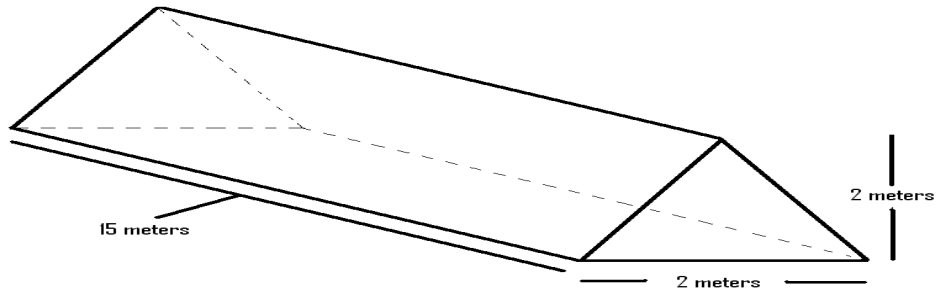

Suppose that the tank described above is full of sewage and that this sewage has a density of $1000(1 + e^{-2x})\ \frac{kg}{m^3}$, where x is the distance in meters above the base of the tank.

a. [5 points] Find a definite integral that computes the mass of the sewage in the tank.

b. [2 points] Compute the value of the integral using your calculator. Do not forget to include the units.

9. [11 points] In the following problems show all your work to receive full credit.

a. [7 points] The population of an invasive aquatic plant in a circular lagoon has density given by $\delta(r) = 20(1 - e^{-r^2})$ kg/m^2, where r is the distance in meters from its center. The lagoon has radius R meters. Find the exact amount of plants living at the lake.

[redacted]

4. [8 points] In a small town, property values close to the school are determined primarily by how far the land is from the school. The function $\delta(r) = \dfrac{1}{ar^2+1}$ gives the value of the land (in thousands of dollars per m^2), where r is the distance (in meters) from the school and a is a positive contant.

a. [5 points] Find a formula containing a definite integral that computes the value of the land that lies in the annulus of inner radius 100 m and outer radius 200 m (figure shown below).

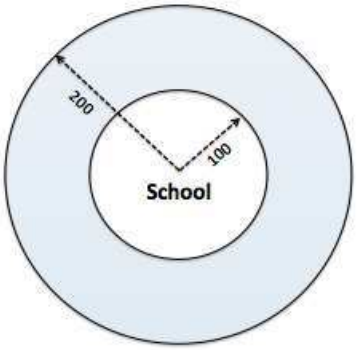

b. [3 points] Calculate the exact value of the land that lies in the annulus of inner radius 100 m and outer radius 200 m. Your answer should contain a. Show all your work.

6. [10 points] O-guk loves to eat vegetables, especially carrots. Every morning, he eats a bin filled to the top with shredded carrots. The bin is in the shape of a half cylinder and it is pictured below. The density of the carrots at height h m from the bottom of the bin is given by $\delta(h)$ kg/m^3.

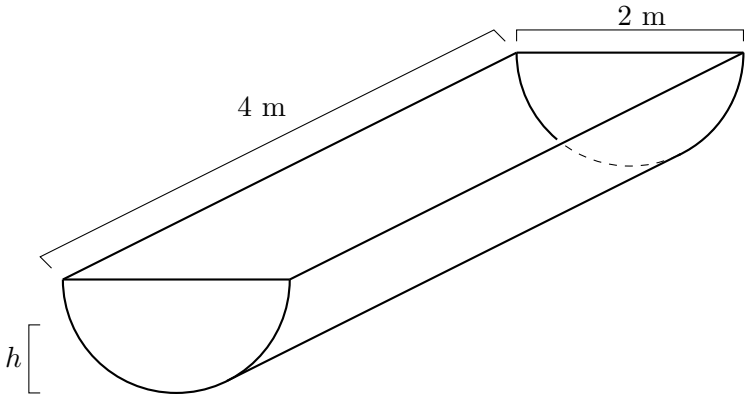

a. [6 points] To get an idea of how much he eats, write an expression involving integrals that gives the mass of the carrots in the bin. Include **units**. Don't compute any integrals.

[redacted]

6. [7 points] A thin plate has the shape bounded by the curves $y = f(x)$, $y = a - x$ and the y-axis, for some positive constant a. The plate has a density of $\delta(x) = 7 + x$ kg/m^2.

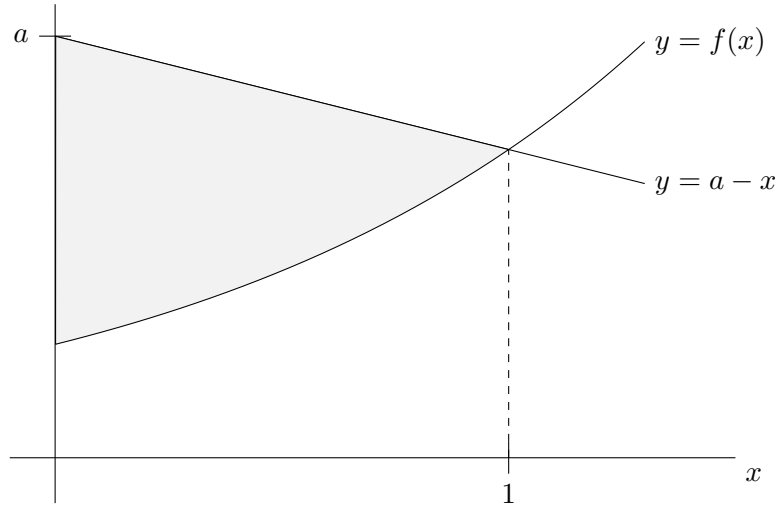

a. [4 points] Write an expression involving integrals that represents the total mass of the plate. Do not evaluate any integrals.

[redacted]

3. [11 points] During a trip to the local aquarium, Steph becomes curious and decides to taste the fish food. The fish food tank is completely filled with food, and it is in the shape of a pyramid with a vertical hole through its center, illustrated below (the dashed lines are not part of the tank). The tank itself is 3 m tall, and the pyramid base is a square of side length 10 m. The top and bottom of the hole are squares of side length 4 m. The food is contained in the shaded region only, **not** in the hole.

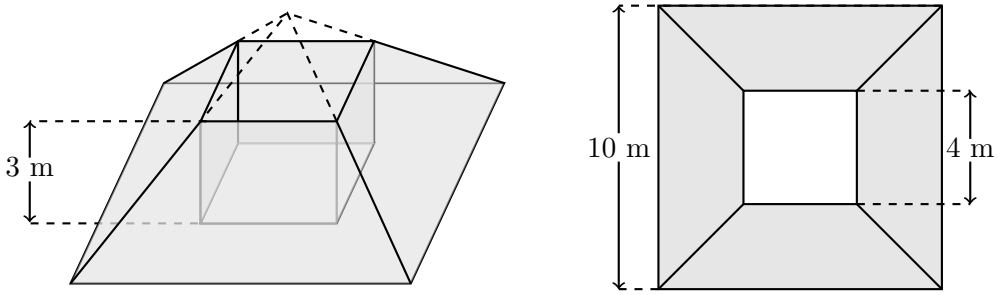

SIDE VIEW TOP VIEW

a. [5 points] Write an expression that gives the approximate volume of a slice of fish food of thickness Δh meters, h meters from the bottom of the tank.

b. [3 points] Suppose that the mass density of fish food is a constant δ kg/m^3. Write, but do **not** evaluate, an expression involving integrals that gives the mass of fish food in the tank.

[redacted]