Solution of Homework #4, 1998 Fall

MEAM 501 Analytical Methods in Mechanics and Mechanical Engineering

1. *Bezier and B-splines cannot reproduce conics and circles. To overcome this, we shall introduce rational curves using the homogeneous coordinates* $P^h : (hx, hy, hz, h)$ *for a point* $P : (x, y, z)$ *in a space. We first apply the Bezier splines to the homogeneous coordinates :*

$$\mathbf{r}^h(s) = \sum_{i=1}^{n+1} \mathbf{r}^h{}_i B_i^n(s) \quad , \quad \mathbf{r}^h{}_i = \begin{Bmatrix} h_i x_i \\ h_i y_i \\ h_i z_i \\ h_i \end{Bmatrix}$$

Then the corresponding curve in the three dimensional space is obtained by deviding the first three coordinates of the homogeneous ones $\mathbf{r}^h(s)$ *by its homogeneous coordinate h :*

$$\mathbf{r}(s) = \frac{\sum_{i=1}^{n+1} h_i \mathbf{r}_i B_i^n(s)}{\sum_{i=1}^{n+1} h_i B_i^n(s)} .$$

If we use the following MATHEMATICA script program :

```
b[n_,i_,s_]:=(n!/((i-1)! (n-i+1)!)) s^(i-1) (1-s)^(n-i+1)
n=3
cp={{2,1,2,2},{2,0,1,2},{2,1,2,1},{0,1,3,1}}
fh=Expand[Sum[cp[[i]] b[2,i,s],{i,1,n+1}]]
```

This is a mistake ! This line must be

```
fh=Expand[Sum[cp[[i]] b[n,i,s],{i,1,n+1}]]
```

```
f={fh[[1]],fh[[2]],fh[[3]]}/fh[[4]]
```

```
ParametricPlot3D[f,{s,0,1},
    AxesLabel->{"x","y","z"}]
```

We have the curve

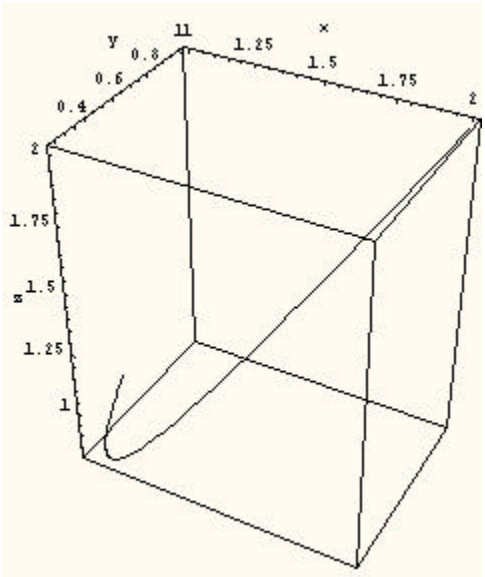

Thus, the three-dimensional curve becomes as follows:

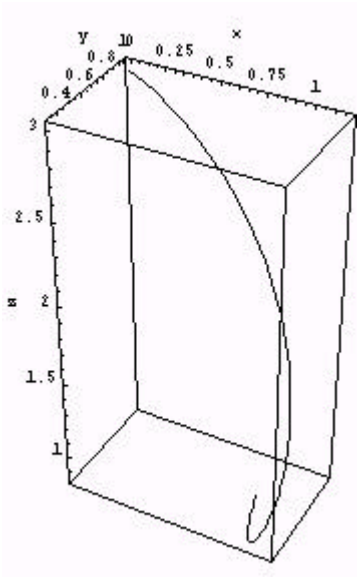

In this example, we have the control points :

i	$\boldsymbol{r}^h_i$	$\boldsymbol{r}_i$
1	(2,1,2,2)	(1,1/2,1)
2	(2,0,1,2)	(1,0,1/2)
3	(2,1,2,1)	(2,1,1)
4	(0,1,3,1)	(0,1,3)

Defining the basis function of the Bezier spline functions, and also loading a special graphic routines from MATHEMATICA:

```
In[1]:=
b[n_,i_,s_]:=(n!/((i-1)! (n-i+1)!)) s^(i-1) (1-s)^(n-i+1)
<<Graphics`PlotField3D`

In[3]:=
n=3
cp={{2,1,2,2},{2,0,1,2},{2,1,2,1},{0,1,3,1}}
fh=Expand[Sum[cp[[i]] b[n,i,s],{i,1,n+1}]]
f={fh[[1]],fh[[2]],fh[[3]]}/fh[[4]]
g1=ParametricPlot3D[f,{s,0,1},
        AxesLabel->{"x","y","z"}]

In[8]:=
df=D[f,s];
tv=df/Sqrt[df.df];
ftv=Table[N[{f,tv}/.{s->(i-1)/10}],{i,1,11}];
g2=ListPlotVectorField3D[ftv]
```

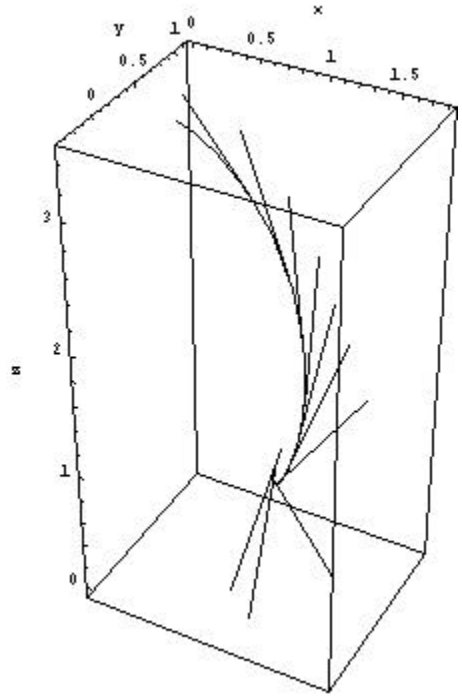

In[10]:=

```
dtv=D[tv,s];
nv=dtv/Sqrt[dtv.dtv];
fnv=Table[N[{f,nv}/.{s->(i-1)/10}],{i,1,11}];
g3=ListPlotVectorField3D[fnv]
```

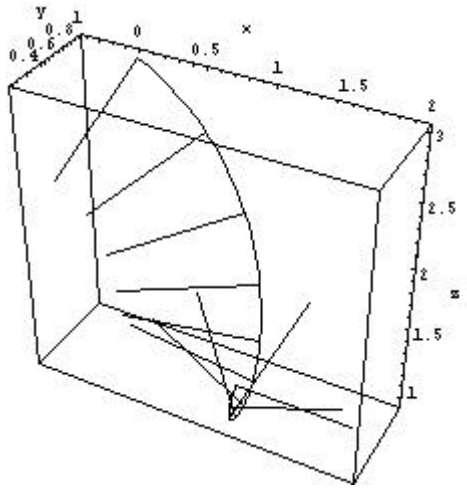

In[12]:=

```
bv={tv[[2]]*nv[[3]]-tv[[3]]*nv[[2]],
                    tv[[3]]*nv[[1]]-tv[[1]]*nv[[3]],
                    tv[[1]]*nv[[2]]-tv[[2]]*nv[[1]]};
fbv=Table[N[{f,bv}/.{s->(i-1)/10}],{i,1,11}];
g4=ListPlotVectorField3D[fbv]
```

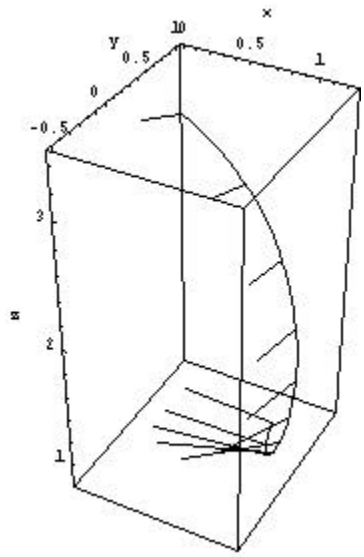

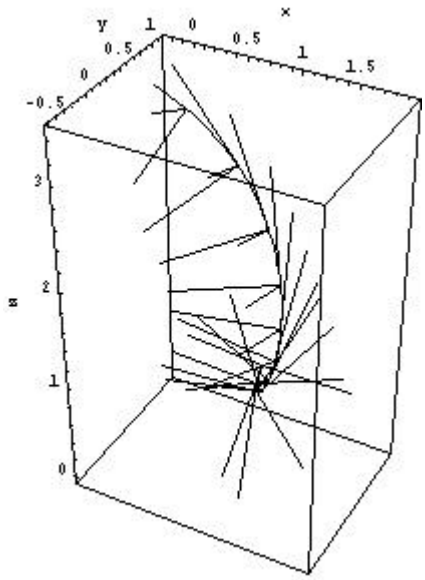

(1) Find the tangent, normal, and bi-normal vectors at s = 0.5, and plot it on the curve.

Position **r** = {1.16667, 0.416667, 1.16667}

Tangent Vector **t** = {0.0706665, 0.388666, 0.918665}

Normal Vector **n** = {-0.995346, 0.0879608, 0.0393509}

Bi-normal Vector **b** = {-0.0655122, -0.91717, 0.393073}

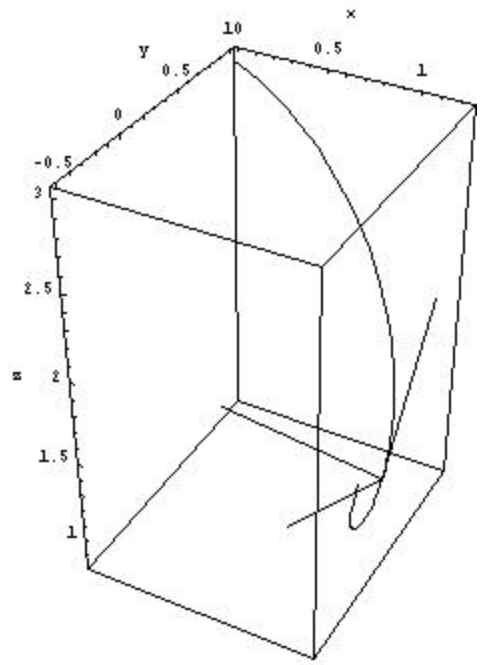

Using the MATHEMATICA program

```
kappa=Sqrt[dtv.dtv]/Sqrt[df.df];
Plot[kappa,{s,0,1},PlotRange->All,AxesLabel->{"s","curvature"},
   GridLines->Automatic, Frame->True]
nkappa=Table[N[kappa/.{s->(i-1)/100}],{i,1,101}];
kappamax=Max[nkappa]
kappamin=Min[nkappa]
```

```
dbv=D[bv,s];
tau=Sqrt[dbv.dbv]/Sqrt[df.df];
Plot[tau,{s,0,1},PlotRange->All,AxesLabel->{"s","torsion"},
   GridLines->Automatic, Frame->True]
ntau=Table[N[tau/.{s->(i-1)/100}],{i,1,101}];
N[Sum[ntau[[i]],{i,1,101}]/101]
length=NIntegrate[Sqrt[df.df],{s,0,1}]
```

we can answer the following questions:

(2) Find the minimum and maximum curvatures of the curve.

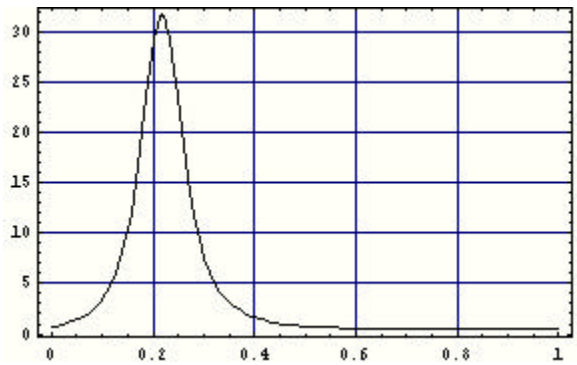

Maximum Curvature κ_{max} = 31.6479

Minimum Curvature κ_{min} = 0.46642

(3) Find the average torsion of the curve.

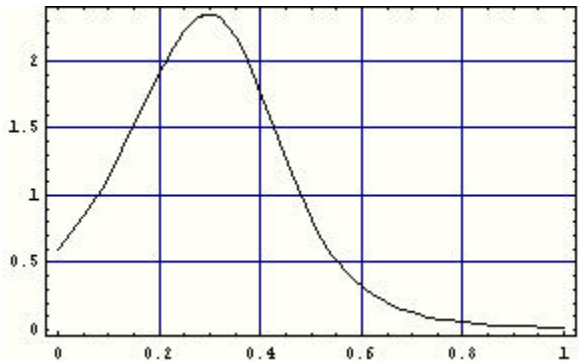

Average Torsion τ_{ave} = 0.880646

(4) Compute the total length of the curve.

Total Length of the Curve L = 2.99047

(5) If $f(x,y,z) = x^2 - y + \cos(z)$, *compute* $I = \int_{\text{along the curve}} f ds$.

I_5 = -0.510642

(6) If $\vec{f} = -\mathrm{r}\, g \vec{e}_z$, *compute* $J = \int_{\text{along the curve}} \vec{f} \bullet d\vec{s}$, *where* $\mathrm{r}\, g$ *is a given constant.*

$I_6 = -2\mathrm{r}\, g$

2. Suppose that a curved surface S is given by the Bezier splines :

$$\mathbf{r}(\mathrm{x},\mathrm{h}) = \sum_{i=1}^{m+1}\sum_{j=1}^{n+1} \mathbf{r}_{ij} B_i^m(\mathrm{x}) B_j^n(\mathrm{h}) \quad , \quad \mathbf{r} = \begin{Bmatrix} x \\ y \\ z \end{Bmatrix} \quad , \quad \mathbf{r}_{ij} = \begin{Bmatrix} x_{ij} \\ y_{ij} \\ z_{ij} \end{Bmatrix}$$

with the control points

```
[x_ij]={{ 0.00,-0.1, -0.1,  0,   -0.1},
        { 0.20, 0.2,  0.3,  0.25, 0.28},
```

```
        { 0.50, 0.55, 0.5,  0.45, 0.5},
        { 0.70, 0.75, 0.75, 0.7,  0.8},
        { 1.00, 0.9,  1.1,  1.2,  1}}
    [y_ij]={{ 0   , 0.25, 0.55, 0.7,  1},
        { 0   , 0.2,  0.5,  0.75, 1.1},
        {-0.1 , 0.2,  0.45, 0.8,  0.9},
        { 0.1 , 0.3,  0.55, 0.8,  1.1},
        {-0.1 , 0.2,  0.5,  0.75, 1}}
    [z_ij]={{ 0   , 0.2,  0.3,  0.3,  0.2},
        {-0.1 , 0.2,  0.3,  0.1,  0},
        {0    , 0.1,  0,   -0.1, -0.1},
        {0.1  , 0.1,  0,   -0.1,  0},
        {0.1   , 0  , -0.1, -0.2, -0.1}}
```

and m = n = 4.

Using the MATHEMATICA program

```
In[3]:=
xij={{ 0.00,-0.1, -0.1,        0,          -0.1},
                        {0.20,     0.2,       0.3,       0.25,    0.28},
                                {0.50,     0.55,    0.5,       0.45,    0.5},
                        {0.70,     0.75,    0.75,    0.7,       0.8},
                        {1.00,     0.9,        1.1,       1.2,       1}};
yij={{0,                0.25,     0.55,    0.7,       1},
                                {0,                0.2,          0.5,       0.75,    1.1},
                                {-0.1,     0.2,        0.45,     0.8,      1.1},
                                {0.1,          0.3,        0.55,     0.8,      1.1},
                       {-0.1,       0.2,        0.5,        0.75,1}};
zij={{0,                0.2,          0.3,        0.3,      0.2},
                       {-0.1,       0.2,          0.3,       0.1,      0},
                      {0,                    0.1,          0,          -0.1,-0.1},
                      {0.1,            0.1,            0,          -0.1,    0},
```

```
                    {0.1,        0,        -0.1,    -0.2,-0.1}};
rvec={0,0,0};
rvec[[1]]=Sum[xij[[i,j]]*b[4,i,s]*b[4,j,t],{i,1,5},{j,1,5}];
rvec[[2]]=Sum[yij[[i,j]]*b[4,i,s]*b[4,j,t],{i,1,5},{j,1,5}];
rvec[[3]]=Sum[zij[[i,j]]*b[4,i,s]*b[4,j,t],{i,1,5},{j,1,5}];
g6=ParametricPlot3D[rvec,{s,0,1},{t,0,1}]
rcurve=rvec/.{t->s};
g7=ParametricPlot3D[rcurve,{s,0,1}]
Show[{g7,g6}]
gv1=D[rvec,s];
gv2=D[rvec,t];
gv12={gv1[[2]]*gv2[[3]]-gv1[[3]]*gv2[[2]],
      gv1[[3]]*gv2[[1]]-gv1[[1]]*gv2[[3]],
      gv1[[1]]*gv2[[2]]-gv1[[2]]*gv2[[1]]};
gv3=gv12/Sqrt[gv12.gv12];
rg3=Table[N[{rvec,gv3}/.{s->(i-1)/4,t->(j-1)/4}],{i,1,5},{j,1,5}];
rg3j=Join[rg3[[1]],rg3[[2]],rg3[[3]],rg3[[4]],rg3[[5]]];
g8=ListPlotVectorField3D[rg3j]
Show[{g6,g8}]
Print["Tangent Vector g1 = ",gv1/.{s->0.5,t->0.5}]
Print["Tangent Vector g2 = ",gv2/.{s->0.5,t->0.5}]
Print["Normal Vector g3 = ",gv3/.{s->0.5,t->0.5}]
surfacearea=NIntegrate[Sqrt[gv12.gv12],{s,0,1},{t,0,1}]
pressure=-rowg*NIntegrate[gv12[[3]],{s,0,1},{t,0,1}]
```

we have the following answers:

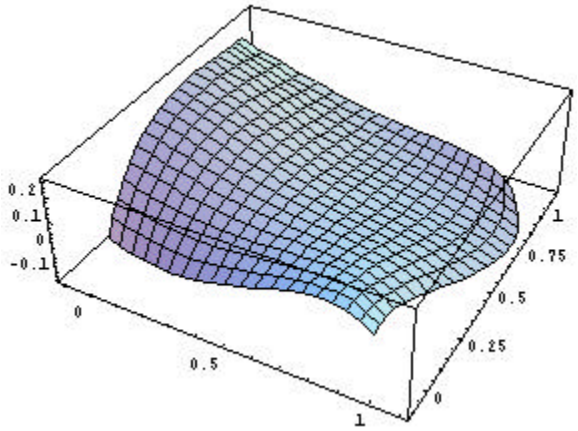

(1) Draw the curved line C defined by $x = h$ *on the surface S.*

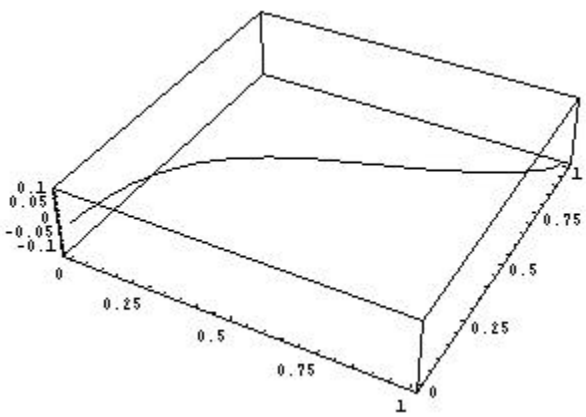

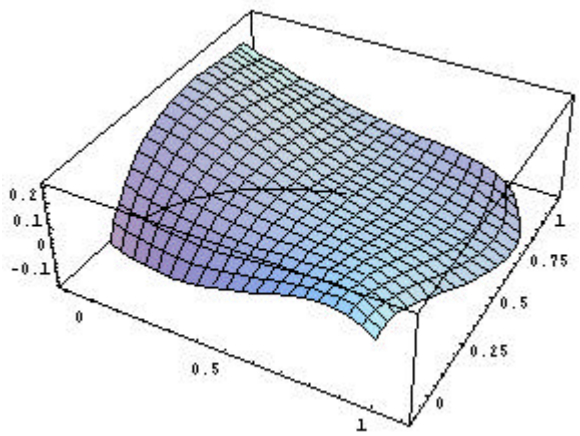

(2) Compute the length of the curve C.

Curve Length L = 1.47115

(3) Draw the unit normal vector $\mathbf{n}$ *and two tangent vectors* $\mathbf{g}_1$ *and* $\mathbf{g}_2$ *at* $x = h = 0.5$.

$\mathbf{g}_1$={ 1.04813, 0.05, -0.34375 }

$\mathbf{g}_2$ = { 0.006875, 1.10312, -0.175 }

$\mathbf{n}$ = { 0.301863, 0.147537, 0.941866 }

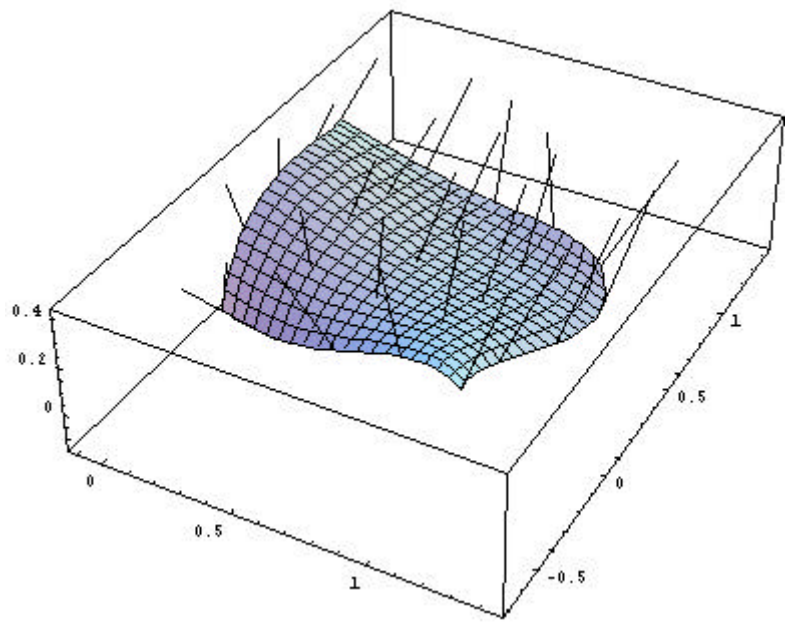

(4) Compute the surface area S.

Surface Area A = 1.27108

(5) A force field is given as $\vec{f} = -\rho g \vec{e}_z$. *Find the resultant pressure force applied to the surface, where* ρg *is a given constant.*

Pressure Load P = - 1.18803 ρg