Non-Conforming Adaptive Spectral Element Atmospheric Model

Amik St-Cyr, J. M. Dennis and S. J. Thomas

Super Computing Division / Computational Science Section

NCAR

http://www.ucar.edu/

Why localized refinement?

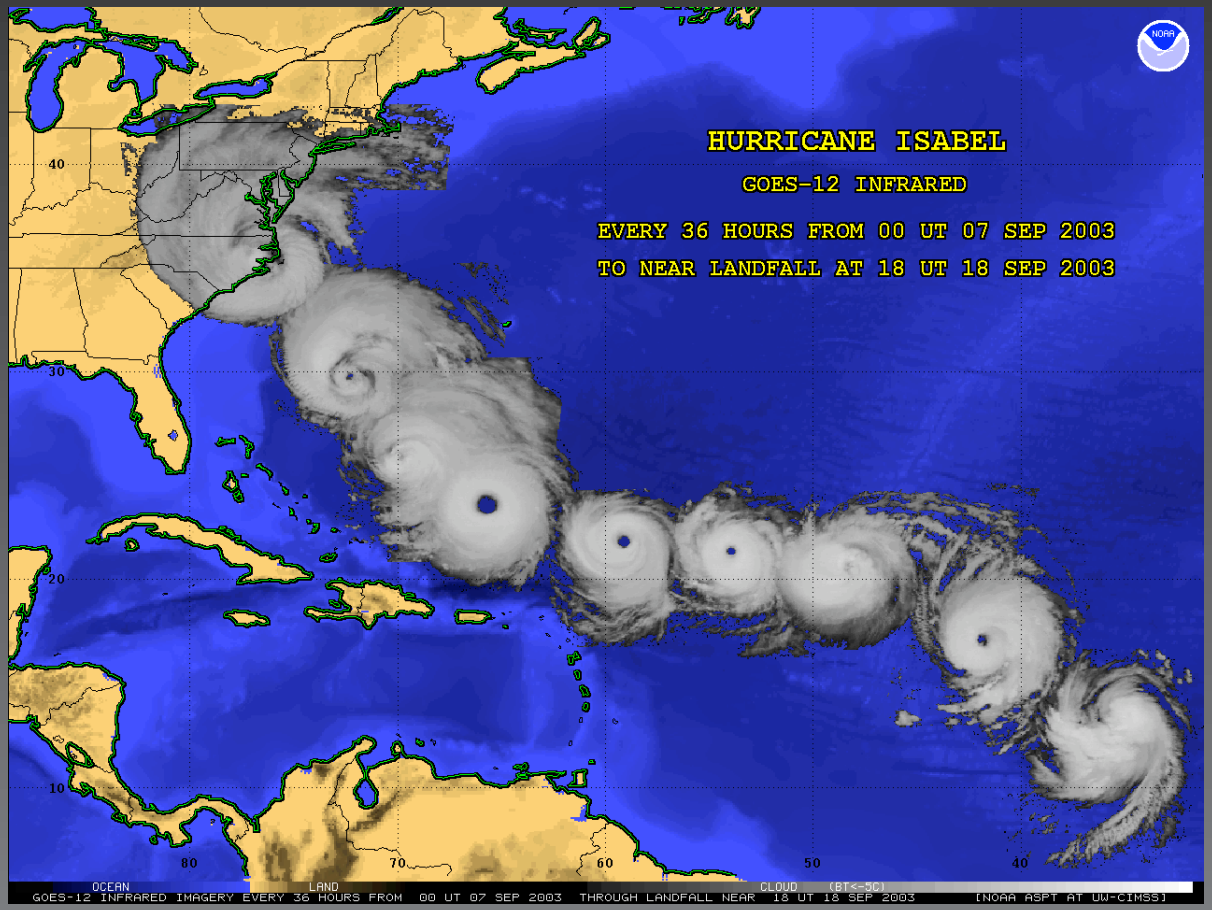

Figure 1: Important regional weather feature tracking

Motivation

- Local mesh refinement (h-p) restricts time step
- Primitive equations are ill-posed with boundary conditions
- New alternative to semi-Lagrangian advection (SL)
- Nonlinear operator integrating factor splitting (OIFS)
- Equivalence of OIFS and SL
- Splitting error analysis
- Numerical results

Spectral Element Method

- Cubed Sphere (Sadourny 1972)
- High-order method combines
  - ⋆ Finite Element Method
  - ⋆ Pseudo Spectral Method
- Analogous to the spectral transform on each element
- Ideal for local mesh refinement

Velocity expanded in terms of the N-th degree Lagrangian interpolants h_i

$$\mathbf{v}_h^k(r_1, r_2) = \sum_{i=0}^{N} \sum_{j=0}^{N} \mathbf{v}_{ij}\, h_i(r_1)\, h_j(r_2)$$

Global degrees of freedom

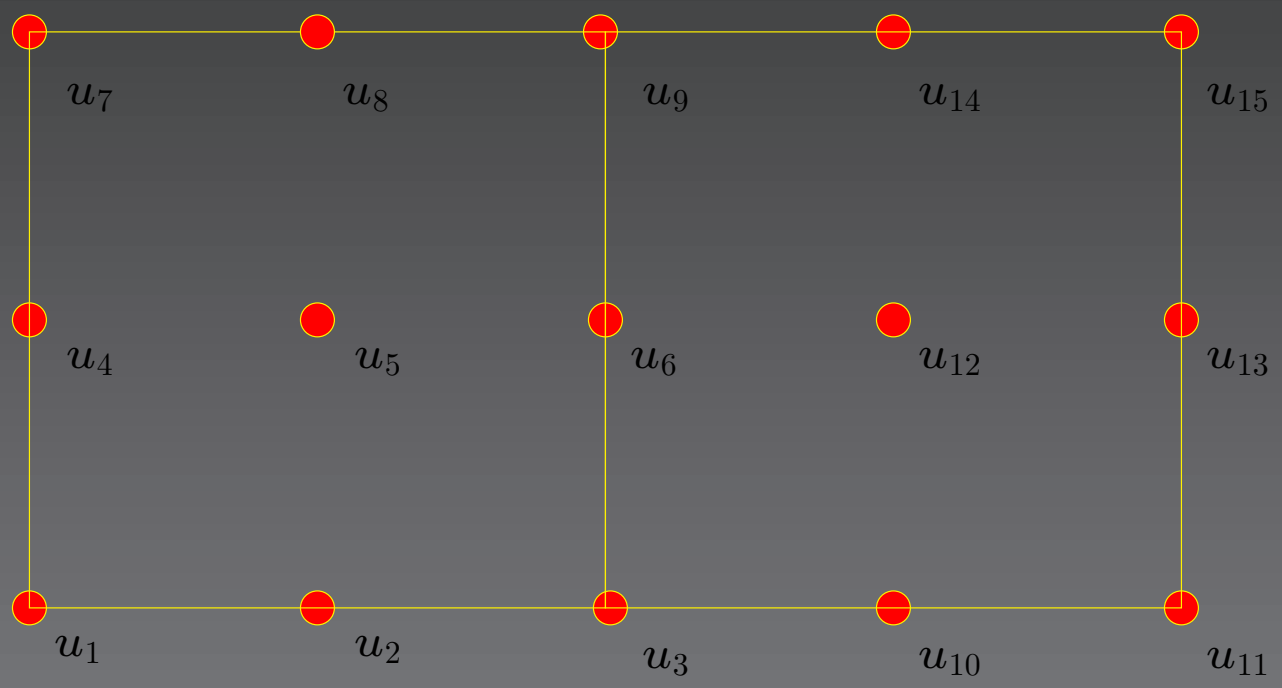

$$v^T A u = v^T M f$$

Local degrees of freedom

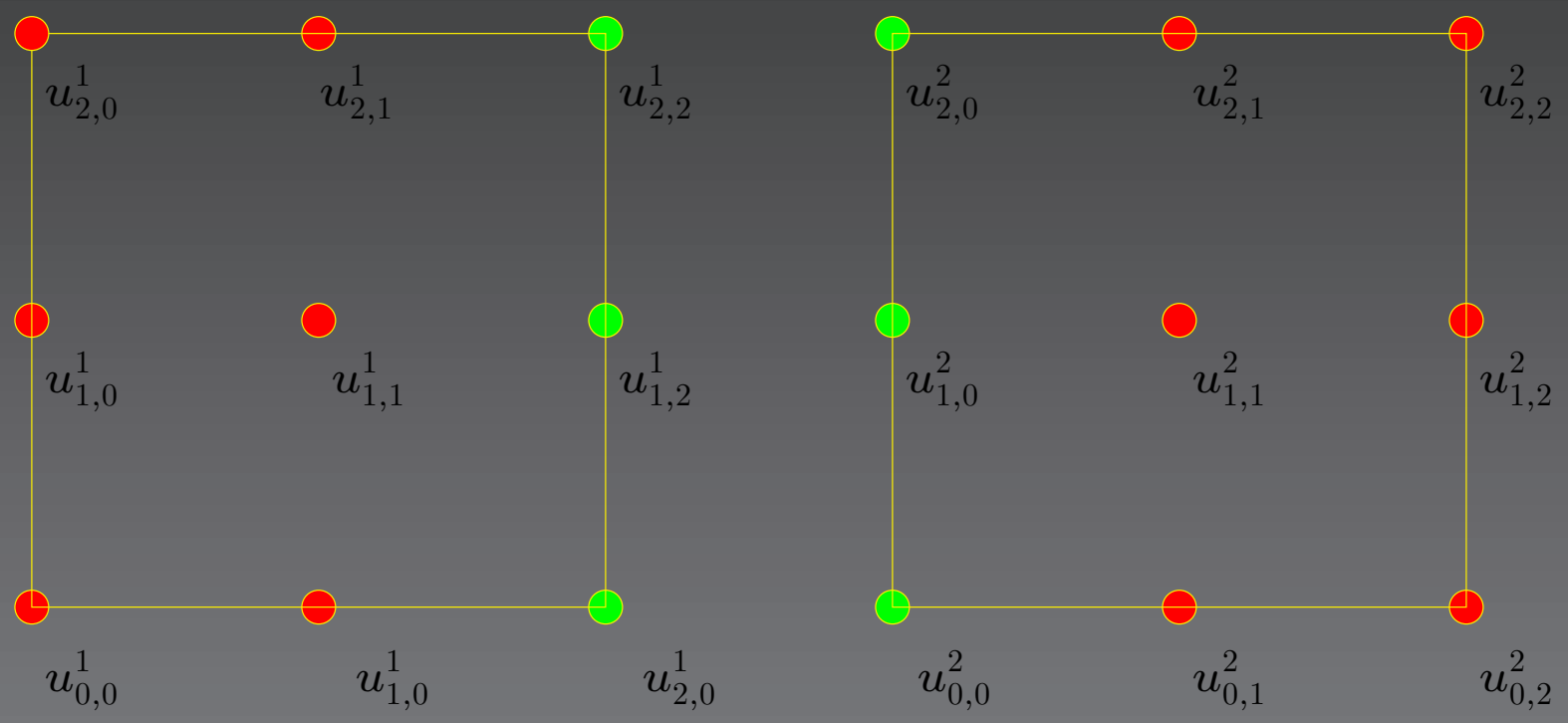

$$v^T Q^T A_L Q u = v^T Q^T M_L Q f$$
$$v^T Q^T A_L u_L = v^T Q^T M_L f_L$$

Interpolation based non-conforming elements

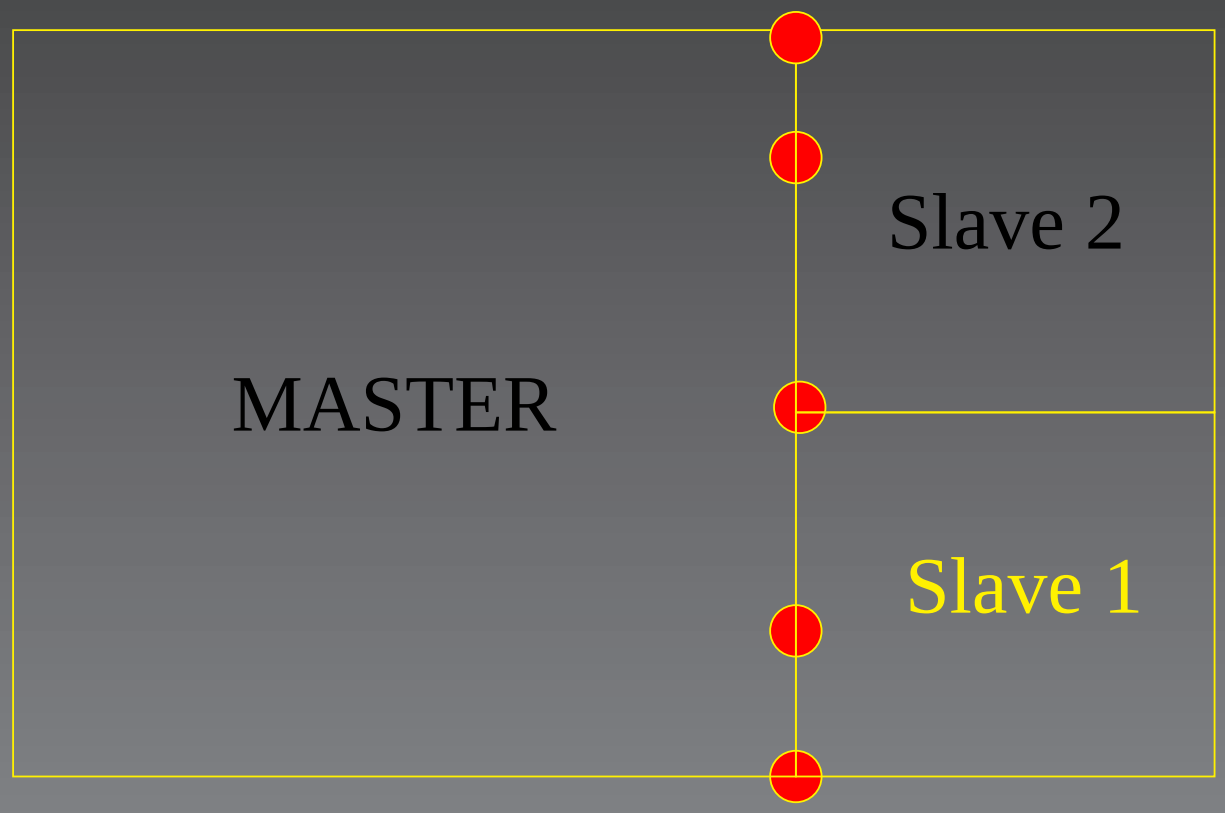

Figure 2: Non-conforming edges between parent and children

Trace interpolation

Boolean matrix Q is redefined as

$$Q = J_L \tilde{Q}$$

where J_L is an interpolation matrix.

DSS is conceptually the same:

$$v^T A u = v^T (\tilde{Q}^T J_L^T) A_L (J_L \tilde{Q}) u = v^T Q^T A_L Q u.$$

(Fischer, Kruse and Loth 2002)

Validation: test description

- Standard test suite of Williamson et al. 1992: test case 1.
- The initial condition is only C_0.
- Error estimator based on true solution.
- Error estimator of C. Mavriplis.
- Novel AMR algorithm uses only nearest neighbors communications. (no broadcast of the tree)
- Comparison between locally refined and uniform: same error.

Time discretization

Semi-Lagrangian advection

- **Departure point: trajectory integration**
- **Fixed point iterations**
- **Interpolation costs** $\mathcal{O}(N^{2d})$
- **Numerical dissipation and dispersion**
- **Flow dependent communication patterns**

SL backtracking

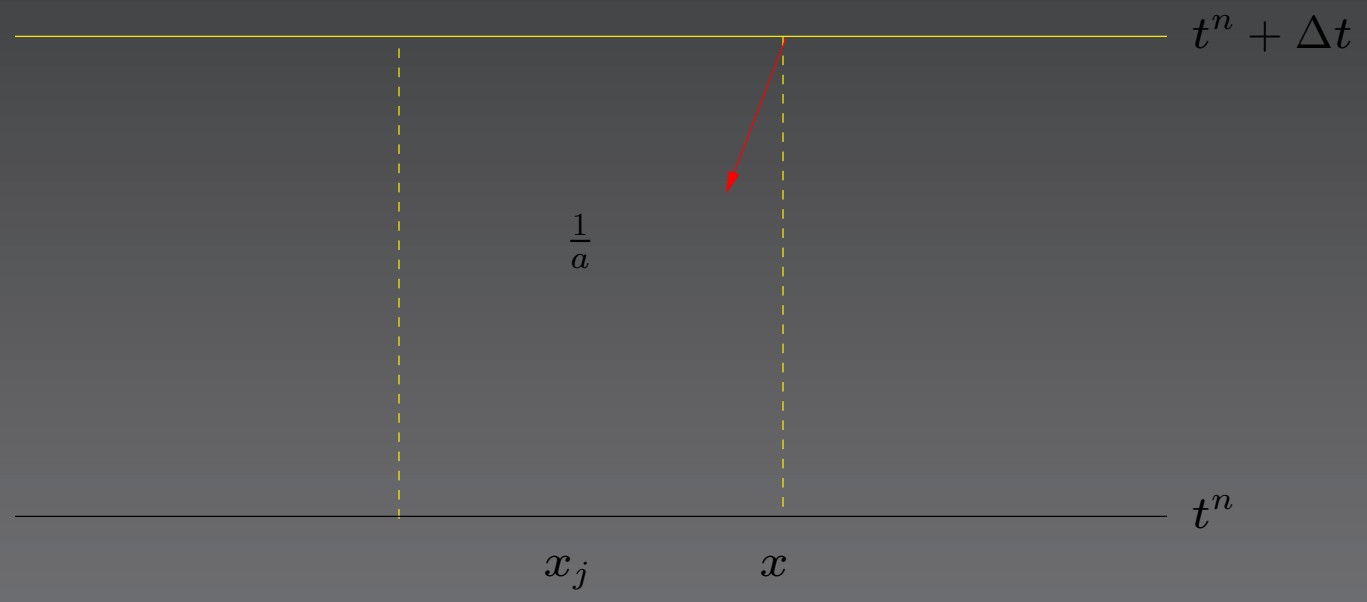

SL backtracking

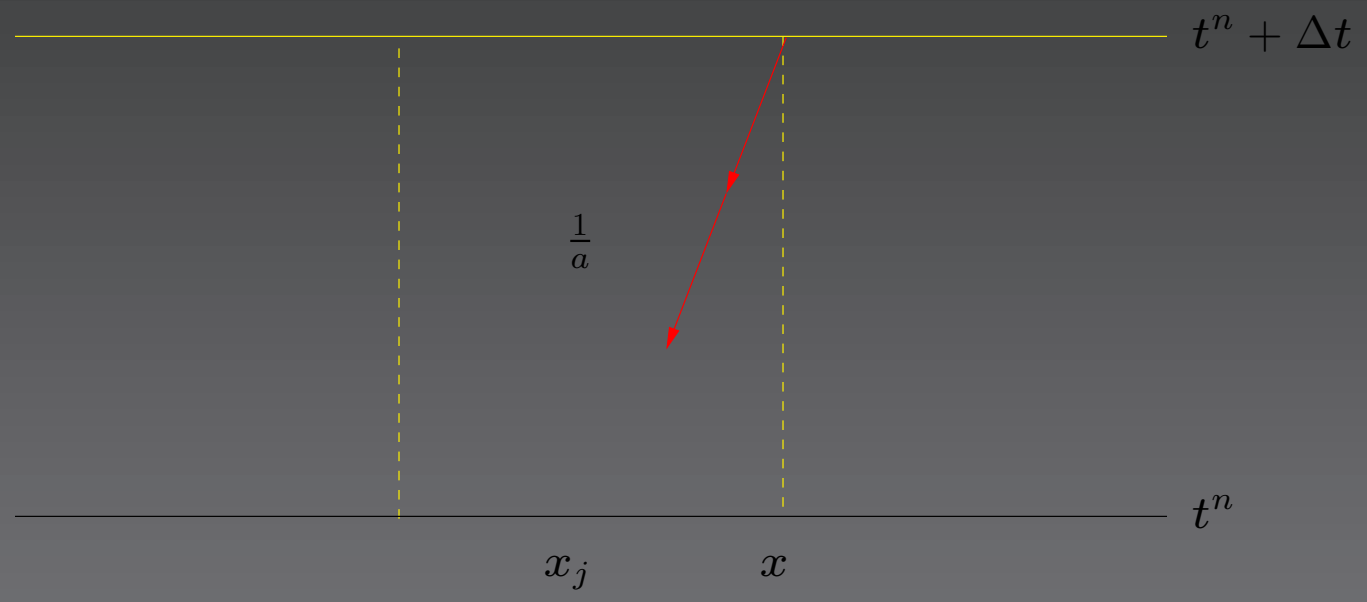

SL backtracking

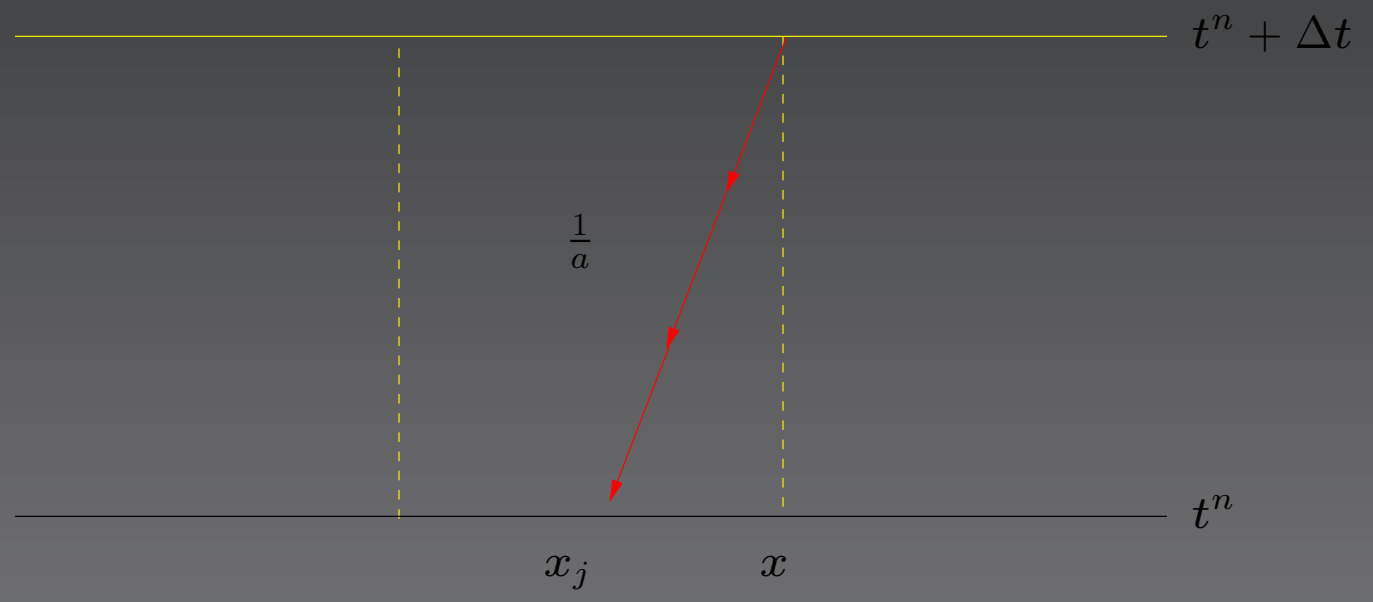

Time discretization

Operator Integration Factor Splitting

- **Maday, Patera, Ronquist 1990**
- K **elements of order** N**,** KN^d **grid points**
- **Scalar advection requires** dKN^{d+1}
- **OIFS more efficient if sub-step** $< N^{d-1}$ **"times"**
- **Purely Eulerian: regular communication patterns**

OIFS Sub-cycling

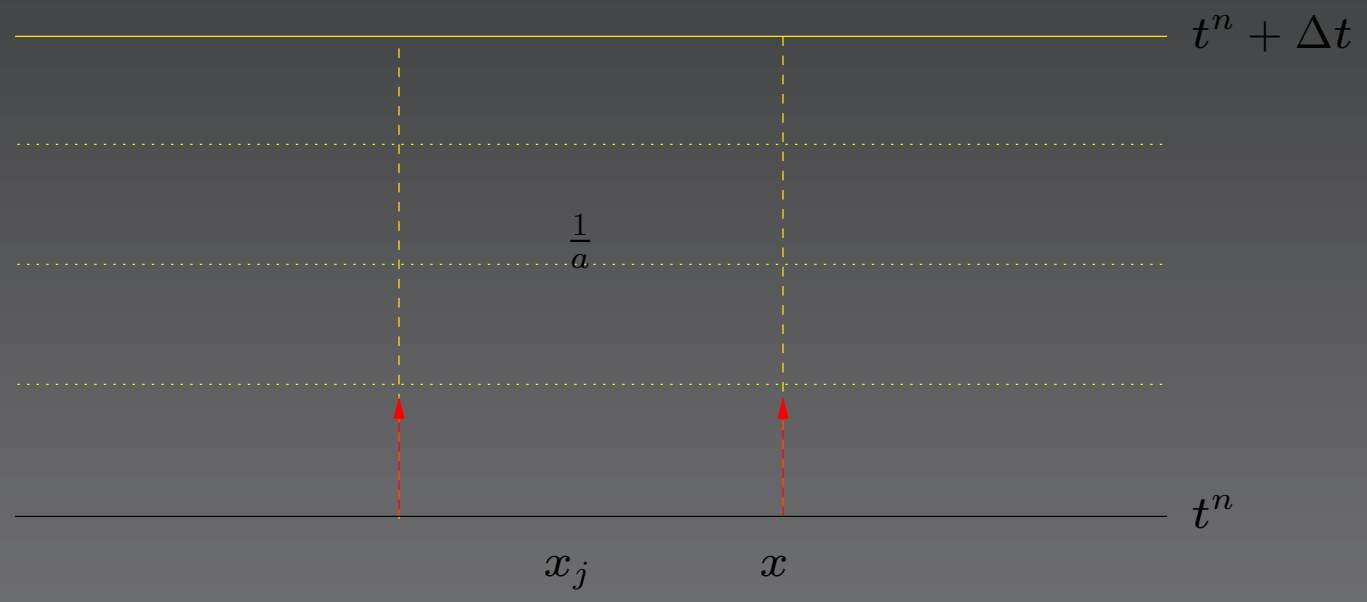

OIFS Sub-cycling

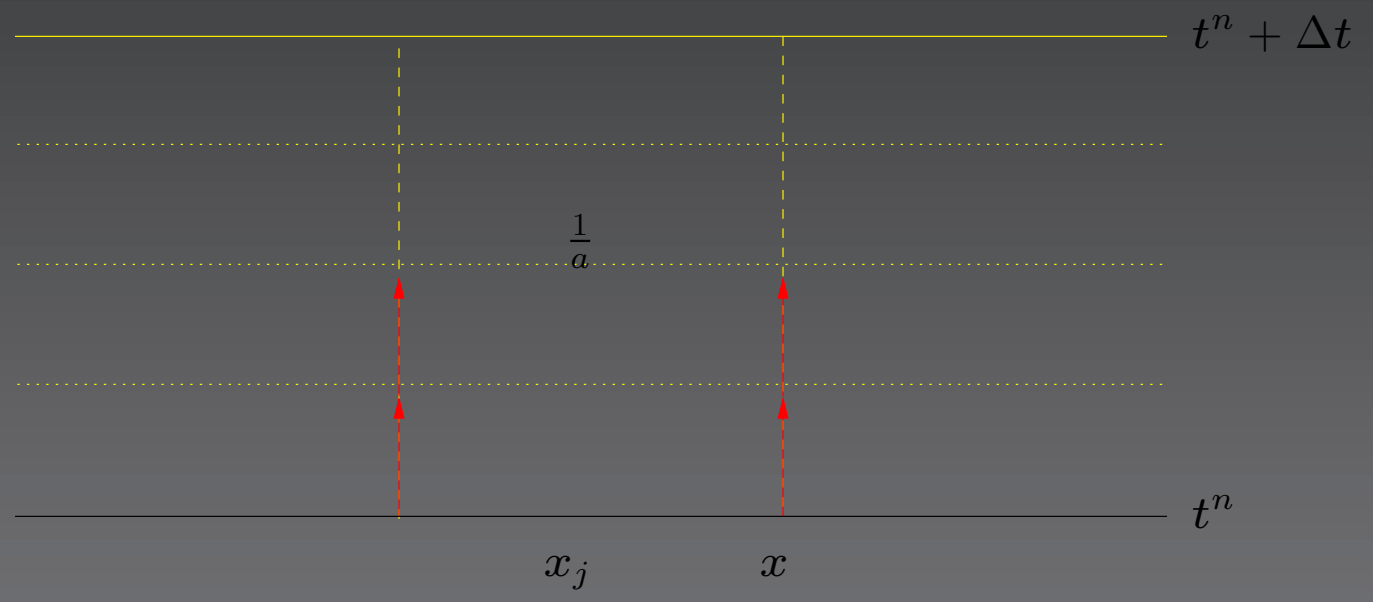

OIFS Sub-cycling

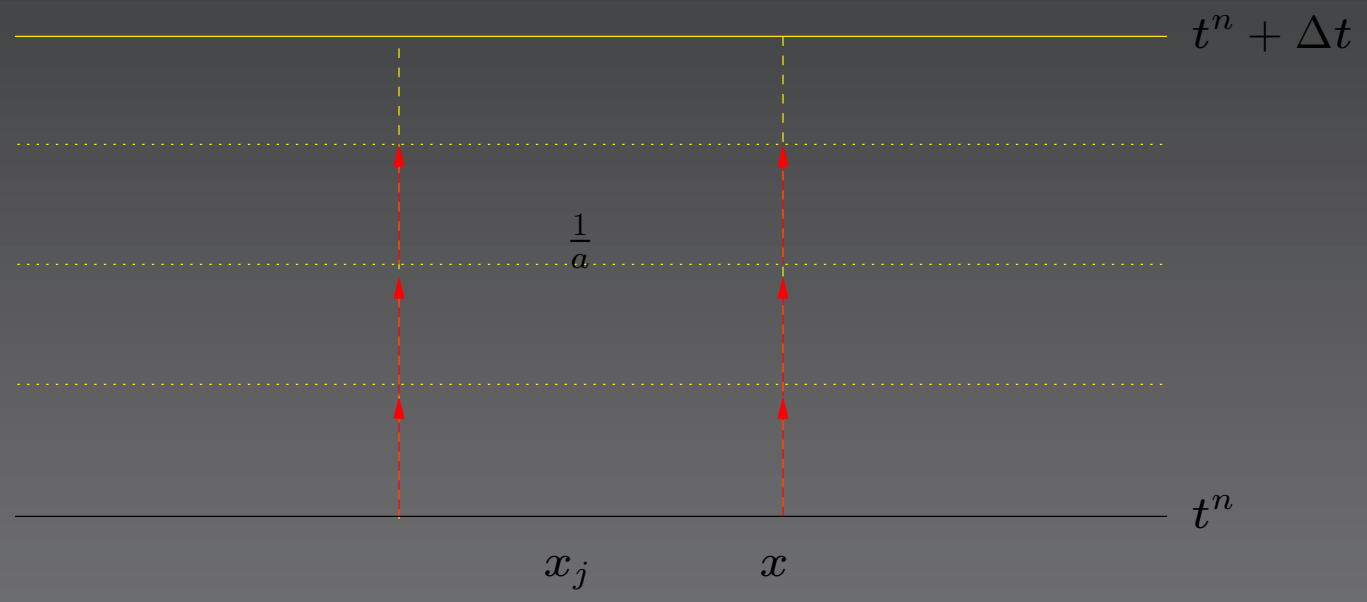

OIFS Sub-cycling

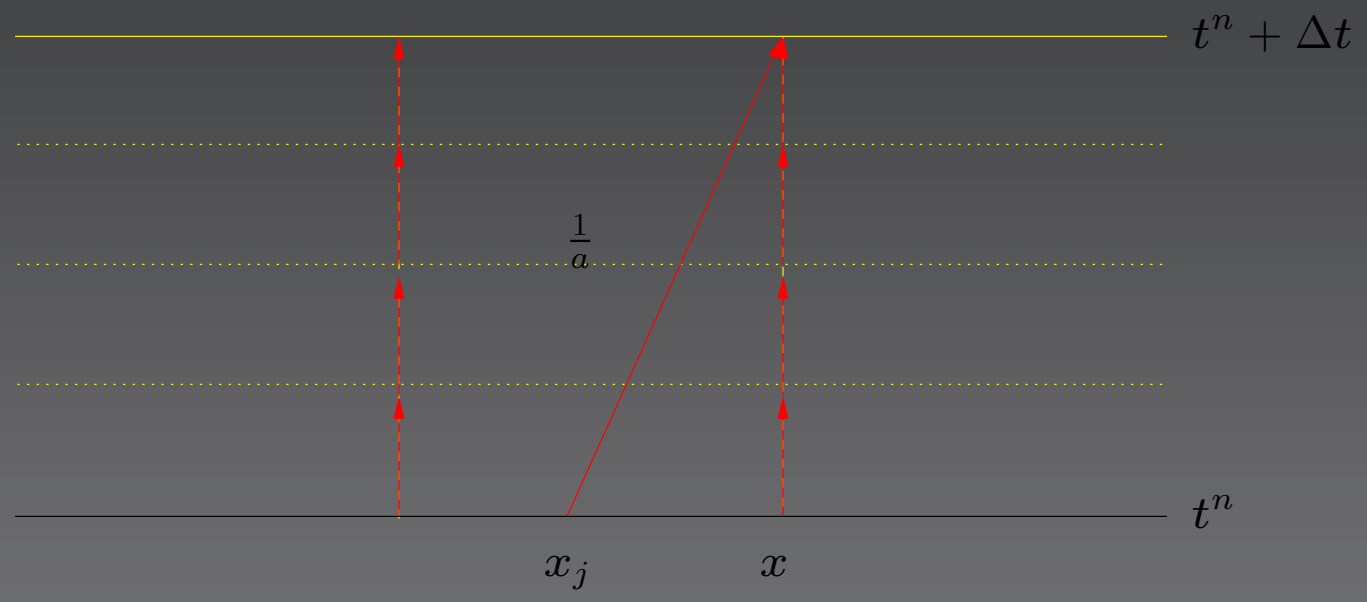

Operator Integrating Factor Splitting

$$\frac{du(t)}{dt} = S(u(t)) + F(u(t)), \quad t \in [0, T]$$

with initial condition $u(0) = u_0$**.**

Find integrating factor $Q_S^{t^*}(t)$**, such that** $Q_S^{t^*}(t^*) = I$**,**

$$\frac{d}{dt} Q_S^{t^*}(t) \cdot u = Q_S^{t^*}(t) \cdot F(u).$$

To find the action of $Q_S^{t^*}(t)$ **solve**

$$\frac{dv^{(t^*,t)}(s)}{ds} = S(v^{(t^*,t)}), \quad 0 \leq s \leq t - t^*$$

with initial condition $v^{(t^*,t)}(0) = u(t)$

SL $=$ OIFS / splitting error

OIFS equivalent to semi-Lagrangian

$$u(X(x,t^{n-q}),t^{n-q}) = v^{(t^n,t^{n-q})}(t^n - t^{n-q}).$$

OIFS splitting error is $\mathcal{O}(\Delta t^2)$.

$$e^{k\Delta t(S+F)}u(t^n) - OIFS(e^{k\Delta tF}e^{k\Delta tS}u(t^n)) \cong \mathcal{O}(\Delta t^2).$$

Proofs: see St-Cyr and Thomas (2004)
`http://www.math.ntnu.no/conservation/2004/`
(Accepted for publication in Applied Numerical Mathematics)

Nonlinear OIFS

Shallow water and primitive equations are divergent flows.
St-Cyr and Thomas (2004) instead propose sub-stepping

$$\begin{aligned} \frac{\partial \tilde{\mathbf{v}}}{\partial s} + \tilde{\zeta}\, \mathbf{k} \times \tilde{\mathbf{v}} + \frac{1}{2}\nabla\left(\tilde{\mathbf{v}} \cdot \tilde{\mathbf{v}}\right) &= 0 \\ \frac{\partial \tilde{\Phi}}{\partial s} + \nabla \cdot \left(\tilde{\Phi}\, \tilde{\mathbf{v}}\right) &= 0 \end{aligned}$$

with initial conditions $\tilde{\mathbf{v}}(\mathbf{x}, t^{n-q}) = \mathbf{v}(\mathbf{x}, t^{n-q})$**,**
$\tilde{\Phi}(\mathbf{x}, t^{n-q}) = \Phi(\mathbf{x}, t^{n-q})$**.**

Advection implies purely imaginary eigenvalues:
Integrate using fourth-order Runge-Kutta (RK-4) method.

Time Discretization

Integration factor applied to the SWE's

$$\frac{d}{dt} Q_S^{t^*}(t) \begin{bmatrix} \mathbf{v} \\ \Phi \end{bmatrix} = -Q_S^{t^*}(t) \begin{bmatrix} f\,\mathbf{k} \times \mathbf{v} + \nabla\Phi \\ \Phi_0\,\nabla \cdot \mathbf{v} \end{bmatrix}.$$

Backward Differentiation Formula (BDF-2):

$$\begin{aligned} \frac{3\mathbf{v}^n - 4\tilde{\mathbf{v}}^{n-1} + \tilde{\mathbf{v}}^{n-2}}{2\Delta t} &= -\mathbf{M} f \mathbf{v}^n - \nabla\Phi^n \\ \frac{3\Phi^n - 4\tilde{\Phi}^{n-1} + \tilde{\Phi}^{n-2}}{2\Delta t} &= -\Phi_0\,\nabla \cdot \mathbf{v}^n \end{aligned}$$

Non-symmetric due to implicit Coriolis:
Solve using conjugate-gradient squared (CGS) iteration

Numerical results

Williamson et al. (1992)

Test case 2: steady-state geostrophic flow.

Test case 5: flow impinging on a mountain.

Efficiency for h and p refinements.

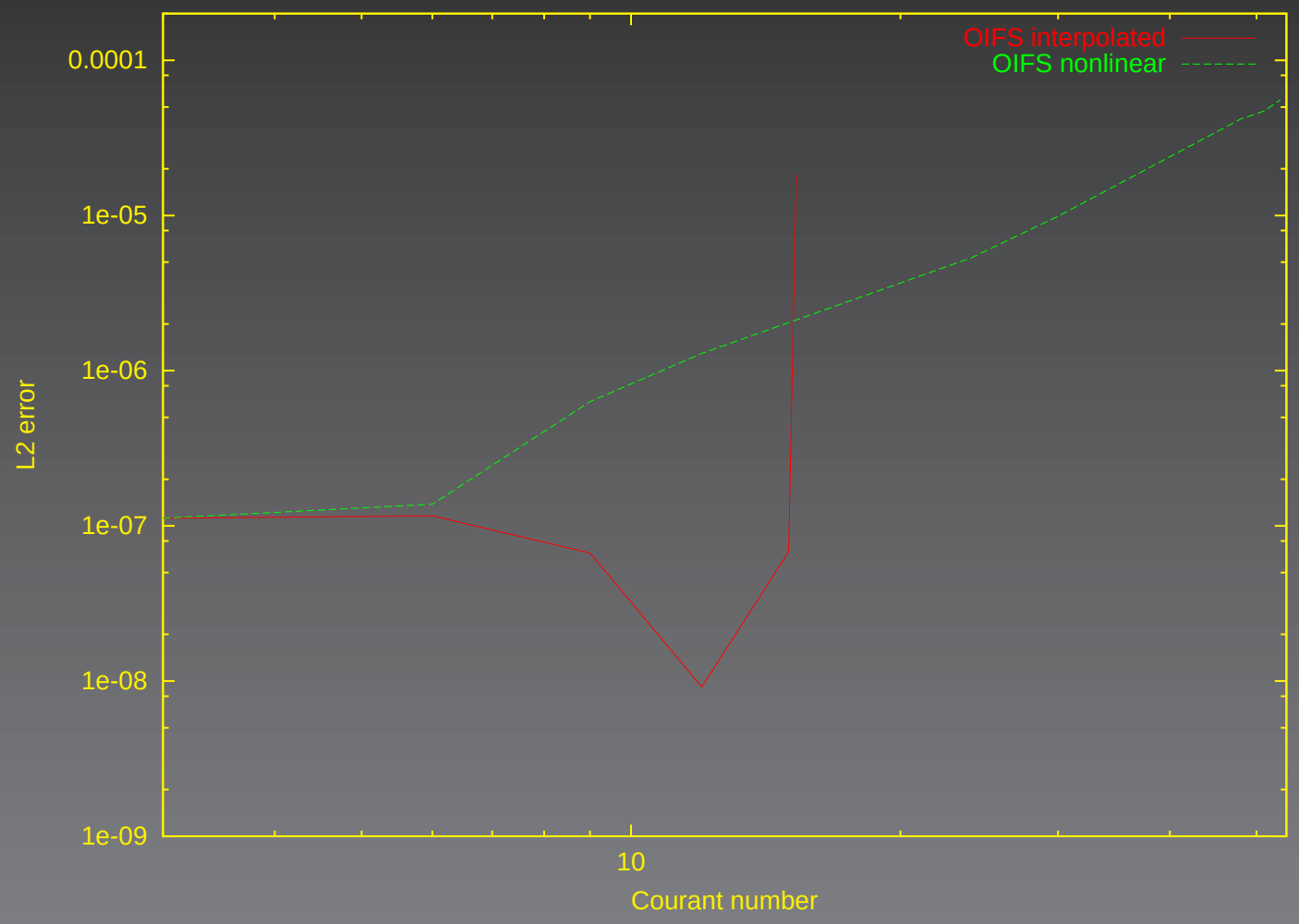

Figure 3: Steady state geostrophic flow, Interpolated OIFS: MAX CFL = 6, $\Delta t = 540$ sec. Nonlinear OIFS: MAX CFL= 53, $\Delta t = 4770$ sec.

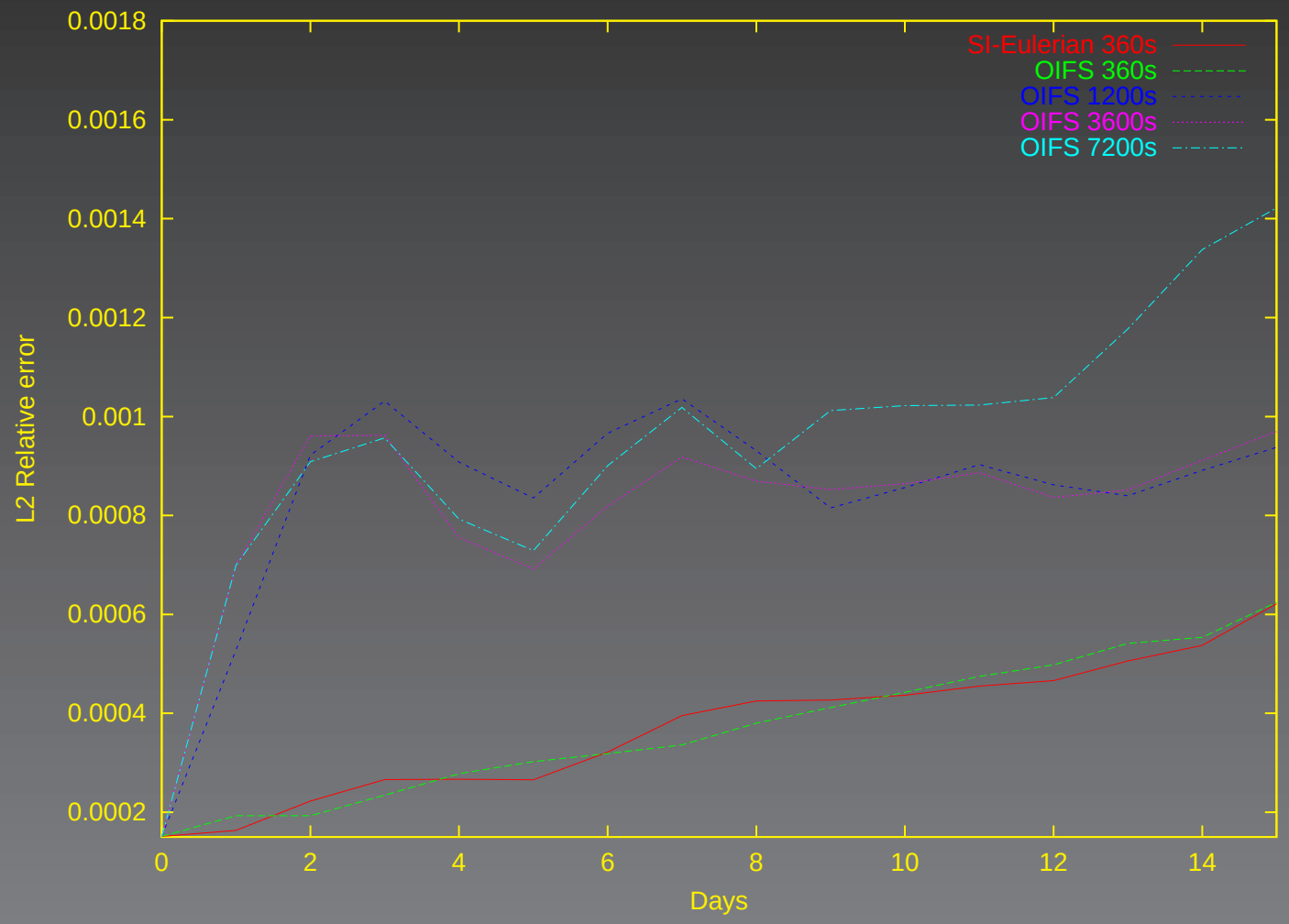

Figure 4: Flow impinging on a mountain (l_2 errors)

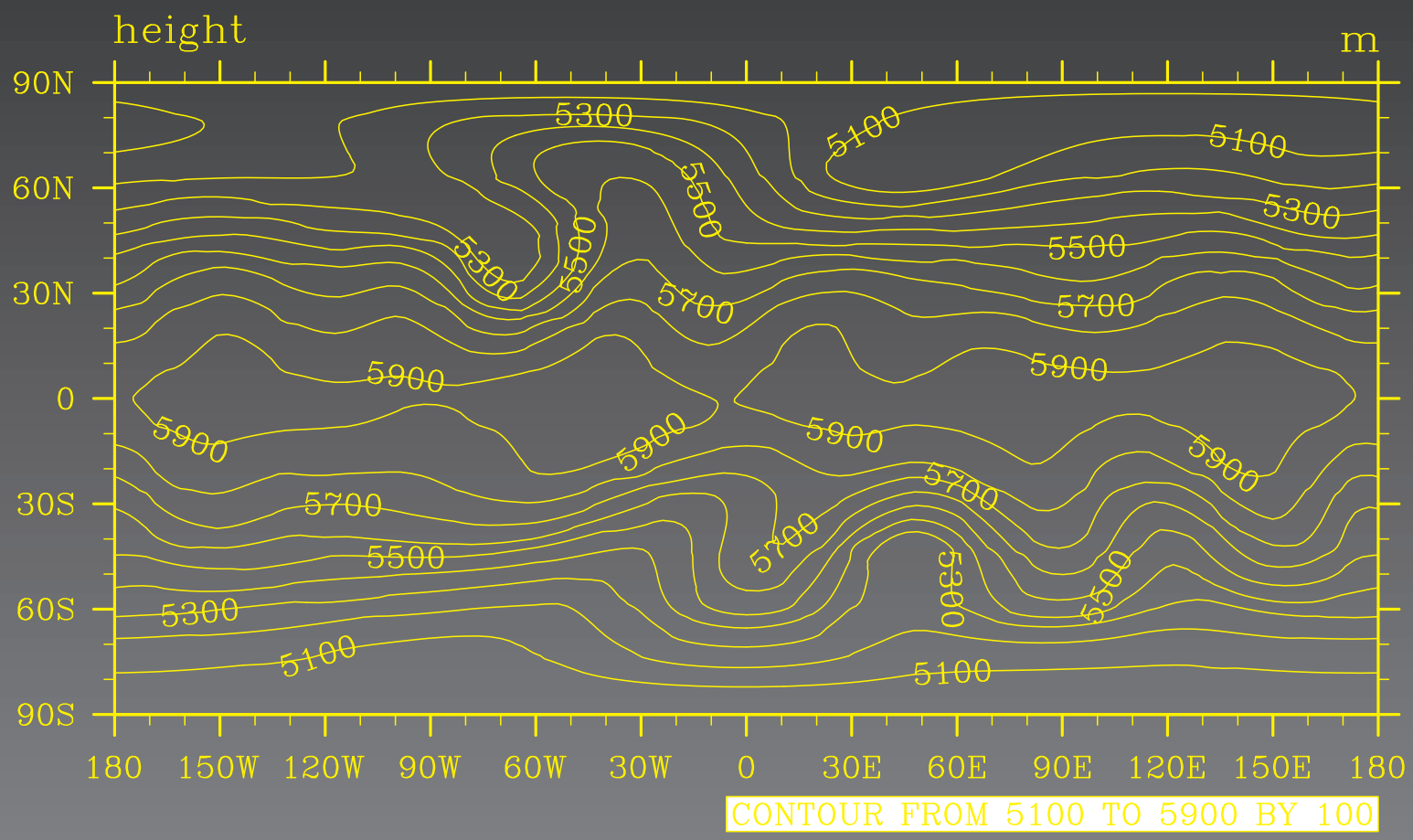

Figure 5: Flow impinging on a mountain (geopotential height), Nonlinear OIFS: $\Delta t = 480$ **sec**

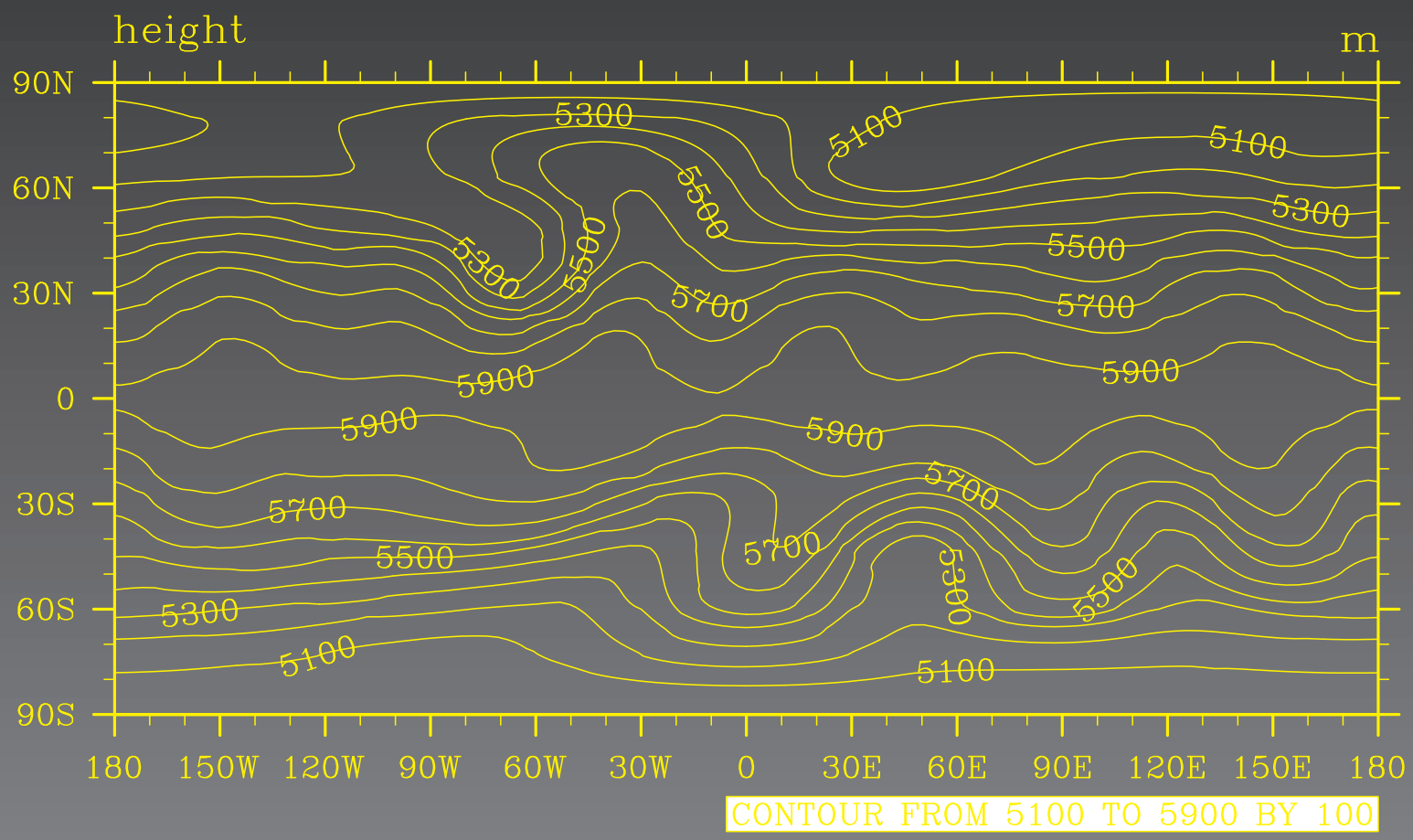

Figure 6: Flow impinging on a mountain (geopotential height), Nonlinear OIFS: $\Delta t = 14400$ **sec**

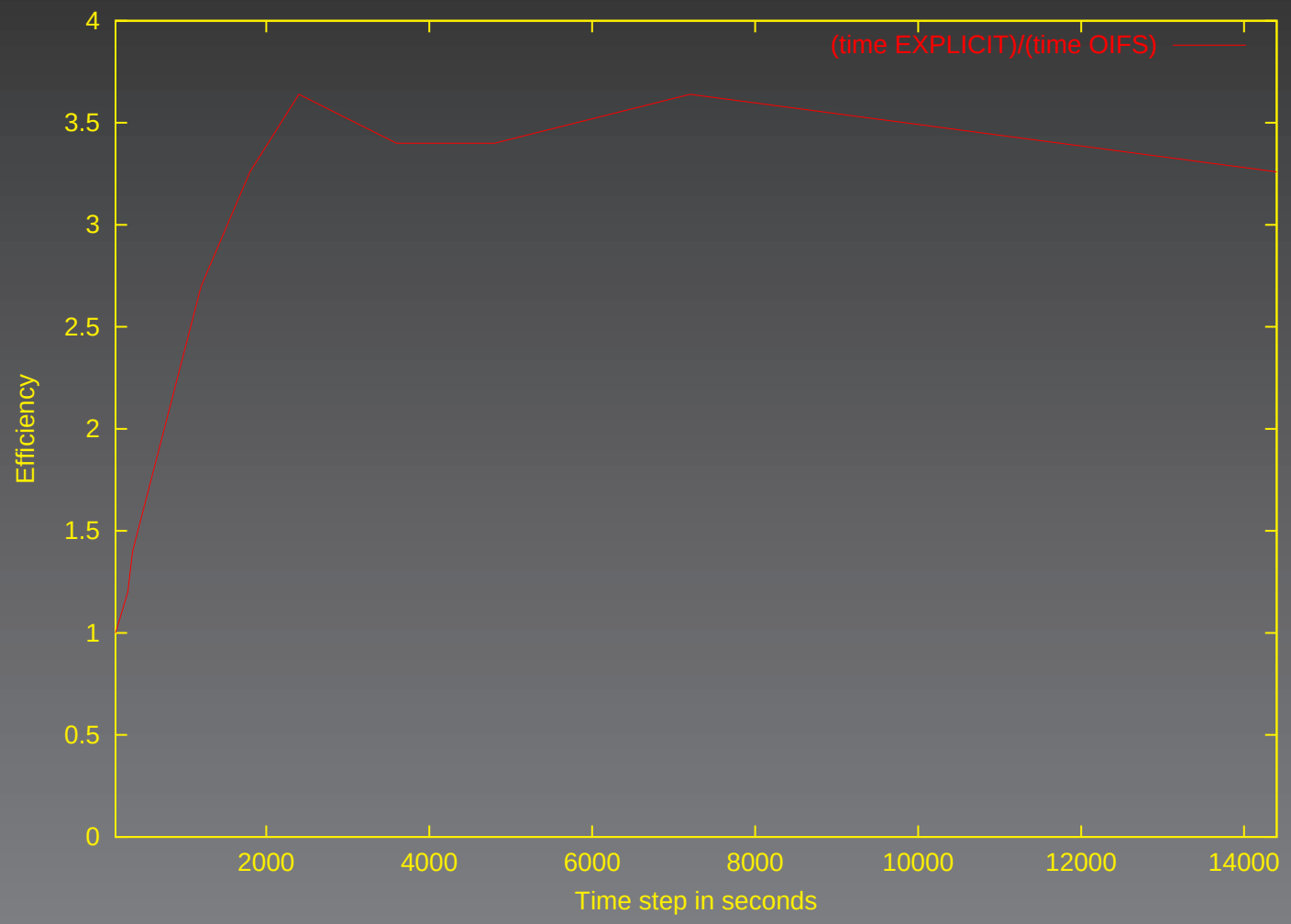

Figure 7: Efficiency of Nonlinear OIFS versus explicit: OIFS nearly 3.7 times faster!

h-p refinement

- **Fully developed flow** $=>$ $\exists$ **at least one element at max ref. level**
- **Keep time-step fixed** $=>$ **no interpolation in time necessary**
- **Keep time-step at** $dt = 1200s$ **(Scale of the physics forcing terms)**
- **Ratio dynamics / physics** $= 15/85 =>$ **if** $dt < 1200s$ **multiple evaluations per time step!**

h-p for $dt = 1200s$

ne / nv	6	8	10	16
2	SI/OIFS	SI/OIFS	SI/OIFS	SI/OIFS
4	SI/OIFS	SI/OIFS	SI/OIFS	failed/OIFS
8	SI/OIFS	SI/OIFS	failed/OIFS	
16	SI/OIFS	failed/OIFS		
32	failed/OIFS			

Table 1: OIFS is twice as efficient for nv ≥ 6 and permits one more level of refinement

Conclusions

- Semi-Lagrangian advection expensive for high-order methods
- Nonlinear OIFS for hyperbolic systems with stiff source term
- Longer time steps than extrapolated OIFS
- OIFS shown equivalent to SL for advection
- Splitting error shown to be $O(\Delta t^2)$
- Four times faster integration rate
- Promising for AMR: OIFS permits one level deeper refinement

Future research

- Optimized Non-Overlapping Schwarz (with Prof. M.J. Gander (Université de Genève))
- Dynamic adaptation for the primitive equations
- Nonlinear OIFS applied to the primitive equations

Acknowledgments

- **This work was funded under NSF grant #CMG-0222282 *An adaptative Mesh, Spectral Element Formulation of the Well-Posed Primitive Equations for Climate and Weather Modeling*.**

- **NCAR Computational Science Section.**

- **NCAR Early Career Scientist Association.**

Contact information:

Email: amik@ucar. edu

Phone: 303-497-1287