Chapter 2. Synthesis of Parallel Kinematic XY Flexure Mechanisms

2.1 Design Requirements and Challenges

Compact XY flexure stages that allow for large ranges of motion are desirable in several applications such as semiconductor mask and wafer alignment [54-55], scanning interferometry and atomic force microscopy [39,48,59], micromanipulation and microassembly [60], single molecule experiments in physics and biology [61], high-density memory storage [62] and MEMS sensors [63] and actuators [41]. Since most of these applications require nanometer or even sub-nanometer positioning, flexure-based motion stages are the only bearing choice available [64]. But the limitation of existing XY flexure stages is their relatively small range of motion. Although magnetic and air bearings may be used to achieve large range high precision motion [2], these are not ideally suited for nanometric positioning because of their size. In some cases large range single DOF flexure stages have been designed [35-36], but large range XY flexure stages are rare in the current technical literature.

There are three relevant length dimensions: size of stage, maximum range of motion, and motion resolution. In this discussion, the ratio between range of motion and stage size is referred to as the specific range, and the ratio between the range of motion and the motion resolution is referred to as the dynamic range. In the applications above, high specific as well as dynamic ranges are desirable. The dynamic range of a precision milling machine axis [range ~ 0.5m, resolution ~ 5μm], and a motorized precision micrometer driven stage [range ~ 10mm, resolution ~ 0.1 μm] is of the order of *1e-5*. While similar dynamic ranges are easily achievable in flexure stages, typical specific range of most designs is only about *1e-3* [54].

Large specific and dynamic range flexure stages are difficult to find because this range of motion requirement imposes several challenges on the design of the overall system, including the sensors, actuators and the flexure mechanism itself. Not only is it difficult to achieve a large specific range using flexure bearings, it is also very difficult to obtain sensors and actuators that have large dynamic ranges. In XY stages, the interaction between three physical components along with the control system, influences the design and choice of each, thereby further restricting the overall system design. Stage size, motion range and resolution depend on all of the motion system components.

This chapter addresses the issues related to designing an XY flexure stage that has a large specific range, given the constraints imposed by the overall motion system. Choice of sensors and actuators is addressed in Chapter 6, and control system design is briefly touched upon in Chapter 7.

As mentioned earlier, there are two kinds of design configurations – serial and parallel designs. Both these configurations present difficulties in meeting the large range motion objective. Since a serial configuration can be built by assembling single DOF systems, it may appear that this arrangement is better suited for large range multi-DOF mechanisms. In fact almost all macro-scale machines and metrology tools are built this way, for example, the milling machine and the coordinate measuring machine. But neither of these machines are designed either for high dynamic performance such as scanning, nor for nanometer resolution. Since actuators that can generate large motions are usually bulky, moving actuators become very undesirable for dynamic performance, and moving cables are sources of disturbance that are detrimental for high resolutions. Ground mounted actuators are therefore much preferred, but the existing parallel mechanisms provide a small specific range, unsuitable for the applications stated above. To understand the challenges in designing a flexure mechanism in a parallel configuration, a typical example is considered.

The conventional approach in a parallel mechanism design is to add the necessary number of constraints so as to achieve the desired degrees of freedom. This approach highlights the limitations imposed by parallel geometry and the other components of the motion system in the design of the flexure stage. If one desires an XYθ mechanism, for example, a common solution is to support a payload stage on three slender beams, as shown in Fig 2.1. This way, the three out of plane degrees of freedom are suppressed, and the payload stage is constrained to move within the XY plane. Several XY and XYθ flexure designs that exist in the literature are conceptually identical to this [48,51-56]. It should be mentioned that a fourth beam can also be added without resulting in an over-constraint, which is an advantage of flexures over rigid link mechanisms. If designed for motion control, this configuration of Fig. 2.1 results in the following tradeoffs.

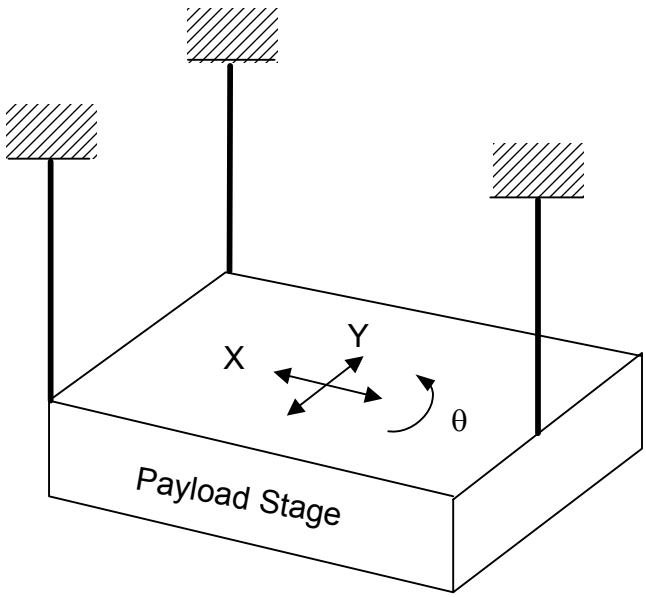

Fig. 2.1 Typical parallel kinematic XYθ flexure mechanism

1. Large range of motion requires that the beams be made as thin as possible, which in turn reduces the stiffness in the out-of-plane DOC directions. This is the classic tradeoff between the DOF and DOC – to increase the range of motion in DOF one ends up compromising the stiffness along DOC. This lowers the payload carrying capacity and stiffness associated with the out-of-plane motion. This limitation is a direct consequence of the fact the flexures are non-ideal constraining devices because their stiffness in various directions cannot be independently assigned. Due to the finite stiffness along DOC, flexure mechanisms are more tolerant to misalignments arising from fabrication and assembly, which is why a fourth beam may be added in this case to bolster the DOC stiffness without causing an overconstraint. But this strategy still doesn't provide an independent control over DOF and DOC.

2. Ideally, no motion is desirable in the DOC direction. In this particular arrangement, there is an undesired error motion in the out of plane directions associated with in-plane motion. Once again, this is due to the imperfect nature of beam flexures. Furthermore, the undesired error motion often has a higher order non-linear dependence on the primary motion, and therefore increases very fast with increasing ranges of motion. This problem, of course, is resolved if the constraints are designed to be in-plane [54-56].

3. One of the most critical challenges is that of integrating the actuators with the motion stage. In this particular case, three independent forces are to be applied on the motion stage to actuate X, Y and θ. Force source actuators that do not require a physical interface, for example direct acting magnetic coil actuators, do not pose a problem in terms of integration. But these are unsuitable for large range of motion applications because of the low forces that they generate, the non-linear dependence of magnetic force with displacement, and loss in axial force due to transverse displacements [65]. Displacement source actuators, like motor driven micrometers or piezo-actuators, generate a much larger force but require a physical attachment between the actuator tip and the stage. Piezo-actuators do not allow for a large range of motion, and are either used for fine positioning in a coarse-fine scheme or in conjunction with a motion amplifiers [35-36]. Displacement source actuators have a preferred direction of motion, referred to as the axial direction, and are typically not designed to support transverse loads [66]. Referring to Fig. 2.2, a maximum displacement x_o of the motion stage in X direction results in the same amount of transverse displacement at the Y actuator tip. This shows that the actuators can't be rigidly connected to the motion stage and that a decoupler, for example a wobble pin or a double hour glasses flexure, is necessary.

   The purpose of the decoupler is to transmit the axial force and absorb the transverse motion, without generating any transverse loads. This idealization, once again, is an unachievable if one uses a flexure-based decoupler to retain the high motion resolution. By making the flexure decoupler compliant in the transverse direction, one ends ups compromising the axial direction stiffness as well. This in turn results in lost motion [8] and reduced dynamic performance as described in point 5 below. Thus, the range of the motion system is not limited by the failure limits of the flexure bearing stage itself, but is restricted to a much smaller level by the maximum transverse displacements that the decoupler allows without generating large enough transverse forces that will damage the actuator.

4. It is desirable to use non-contact sensors for the stage motion measurements, so as to avoid any sources of disturbance at the stage. A motion range of 5mm and resolution of 0.5nm results in a desired dynamic range of at least *1e-7*. The choice of sensors becomes a difficult task because until recently such large dynamic range non-contact sensors that are practical, have not existed. LVDTs that do have a satisfactory dynamic range require the motion stage to move along a straight line, which is not possible in an XY stage. Laser interferometry which also has a high dynamic ranges is suitable only for testing and characterization but is an impractical option for regular operation due to the bulky size, high costs and the set-up required. Capacitance probes do

provide high sensitivity and resolution but have a relatively poor dynamic range of the order of *1e-5*, for a given size. Linear scales also have the necessary range and resolution, and provide non-contact sensing, but are typically single axis sensors, and tolerate little off axis motions. Only recently, two-axis optical scales have become commercially available [67], and constitute one of the few options that are suitable for large range of motion flexure mechanisms.

5. The compliance of the components that lie between the actuator and the stage, for example, the decoupler, is important from a feedback control perspective. As illustrated in Fig. 2.2, a motion in X direction produces a transverse displacement at the Y decoupler. The axial stiffness of the decoupler flexure typically drops non-linearly with an a transverse displacement. Thus the dynamic characteristics of the Y axis become critically dependent on the X axis motion. Since the actuation and the point of interest are non-colocated, the inline stiffness between these two points plays very important role in determining the dynamic performance of the system, and any damping as well as controls strategy has to be robust against this variation in stiffness and corresponding natural frequencies. Clearly, this problem gets more severe with increasing ranges of motion.

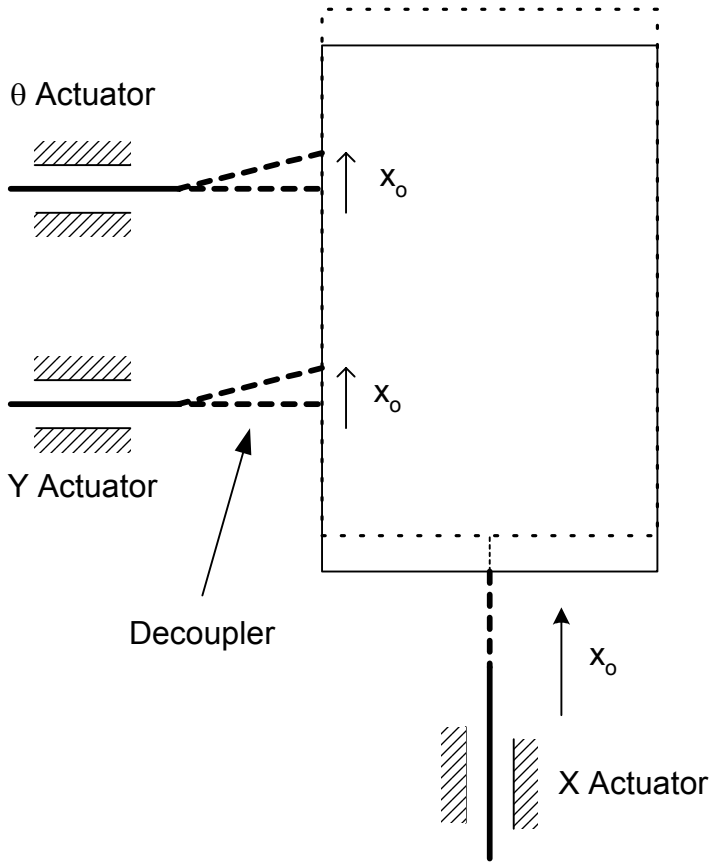

Fig. 2.2 Actuator – Stage Integration

It should be noted that for applications other than motion control, where integration with sensors and actuators is not required, for example in decouplers, probes, and certain sensors, it suffices for the motion stage to simply have the necessary degrees of freedom, and the existing designs are perfectly suitable. But for the purpose of motion control, constraints in the flexure bearing design should be chosen a bit more carefully, so that some of the challenges listed above can be mitigated.

So we see that neither the traditional approach of Fig. 2.1, nor the computational topology synthesis methods mention in Chapter 1, have so far produced parallel mechanism topologies that meet our stated requirements. Based on an understanding of the limitations and tradeoffs that we have identified in the current designs, we start approaching the problem from alternate paths. Rather than an ad hoc arrangement of constraints, we seek those arrangements that will help up mitigate the challenges that are laid out above. Such an arrangement should meet the following specific requirements.

1. In most applications that we are trying to address, the primary positioning objective is in X and Y, and that motion stage yaw is undesirable. Given this requirement, motion stage yaw, θ, may be rejected passively or actively. Either the mechanism should be designed using appropriate flexure units such that the motion stage rotation is constrained to levels below the maximum acceptable yaw errors, or a third motion axis should be incorporated to actively measure and cancel the yaw errors. There are advantages as well as challenges associated with each technique. As explained earlier, adding a yaw control axis in the traditional parallel format can limit an otherwise large X and Y range of motion. Adding yaw control in the serial format will once again result in moving actuators and cables, although the requirements on this actuator will be less stringent because only small motion is needed to correct for θ. From a dynamics point of view, adding a yaw control axis will also help actively reject any yaw vibrations resulting from ambient excitations or disturbances. But this issue may also be addressed passively by means of appropriate vibration isolation and damping design. In general, at both the MEMS scale and the macro scale it is very desirable to keep the number of actuators and sensors, and therefore the number of axes as low as possible. For these reasons, we choose the former approach where yaw motion of the stage is constrained and any observed θ will be treated as *parasitic error motion*.

2. It is desirable to minimize the *cross-axis coupling* between the two degrees of freedom. Specifically, the motion along Y direction in response to a force or displacement along the X direction should be ideally zero, and vice versa. In the absence of an end-point feedback, if one relies on sensors that measure the actuator displacements, a calibration step, either analytical or experimental, is needed to determine the coordinate transformation matrix between the actuator coordinates and the motion stage coordinates. This typically limits the positioning accuracy of the motion stage if there are uncertainties involved in the actuator. In some micro scale applications, an experimental calibration may not even be possible, thereby making it very desirable to eliminate cross-axis coupling. Cross-axis coupling also plays a very important role in determining the dynamic characteristics of the flexure system, because an excitation in one direction can generate vibrations in the other direction, resulting in conditions of parametric excitation and internal resonance. In applications other than motion control when the two axes are not actively controlled, for example in some MEMS sensors [63], this effect is one of the primary performance metrics. In the presence of end-point feedback, and independent actuators, the effect of cross-axis coupling on static and dynamic is far less detrimental. A more mathematical definition of the cross-axes coupling error discussed here shall be provided in Chapter 3.

3. It is also desirable to minimize the *lost motion* between the actuator and the motion stage, for similar reasons as stated above. Otherwise, a calibration step is needed to map the displacements of the actuator to that of the motion stage. Furthermore, eliminating lost motion alleviates the need for end-point sensing, which can be difficult to achieve due space and packaging restrictions. For example, in MEMS scale applications, where all components of the system need be in the same plane for ease of fabrication, end-point sensing may be difficult or even impossible. The importance of the stiffness between the actuator and motion in determining dynamic performance has already been highlighted earlier.

4. Furthermore, the application point of the X actuation force should not be affected by any displacement of the motion stage in the Y direction, and vice versa, an attribute which we term as *actuator isolation*. This is different from the cross-axis coupling error discussed above. The lack of any transverse displacements at the Y actuation point, in response to an X actuation force, mitigates the dependence on the decoupler. While, the decoupler may still be needed to accommodate assembly and manufacturing misalignments, it can be designed to be much stiffer in the transverse direction, and therefore the axial direction, because it no longer limits the range of motion of the mechanism. As explained earlier, the stiffer the decoupler is axially, the better is the dynamic performance of the system. By the same token, in response to a Y force, the point of Y actuation itself should move in the Y direction only, and should not have any transverse motions. These requirements ensure the reliable functioning of the actuators by minimizing transverse loads.

   A Y displacement of the Y actuation point in response to an X force is also generally not desirable because this generates an additional axial force at the Y actuator. But usually this is not as several problem because both the actuator and the mechanism are designed to handle axial loads. The implicit assumption in all this discussion is that the actuators are axial, which is reasonable.

5. For obvious reasons, low thermal and manufacturing sensitivity are desirable for the XY flexure mechanisms discussed here, and both these factors are strongly dependent on the mechanism geometry.

6. Since the primary objective of the XY mechanisms is to provide guided motion along the X and Y directions, and constrain all other motions, it is desirable to maintain the high stiffness and small parasitic errors in the three out of plane directions. In other words, the Degrees of Constraints should be as close to ideal as possible.

Based on an understanding of the challenges posed by flexures in general and the parallel configuration in particular, fundamental design principles [67], intuitive reasoning, and analytical insight, we propose a set of flexure mechanism topologies that meet the above requirements. These proposed designs deviate from the traditional approaches, mentioned earlier, in that they make unique use of known flexural units and geometric symmetry to minimize cross-axis coupling, parasitic yaw of the motion stage, and at the same time maximize actuator isolation. Towards the end of this chapter, a means for modifying these designs is also presented, which allows for out-of-plane motion, in addition to the in-plane translations.

2.2 Proposed Design Principle for a Two Axis Flexure Mechanism

In this entire document, X and Y are defined to be the in-plane axes and Z, the out of plane axis. Fig. 2.3 shows the arrangement of rigid and compliant units of which the proposed flexural mechanism must be composed. There are four rigid stages: ground, motion stage, and two intermediate stages. The motion stage should have two translational degrees of freedom with respect to ground. The intermediate stages are necessary to decouple the motion of the two axes and isolate the actuators that control these two axes. Since the ground mounted actuators cannot be directly connected to the motion stage, the intermediate stages provide the points for actuator force application.

In the rest of this thesis, we shall use the term *flexure unit* to represent building blocks that constitute a flexure mechanism. The rigid stages in Fig. 2.3 are connected to each other by means of flexure units, which act as frictionless bearings or guides and provide constraints to relative motion. Each of the flexure units A, B, C and D is a single degree of freedom mechanism that only allows translation in the direction shown by the double-sided arrow. The fixed stage is connected to Intermediate Stage 1 by means of Flexure A, which only allows for relative motion along the X direction and constrains all other the other degrees of freedom. This implies that no matter what the overall configuration of the entire mechanism is, Intermediate Stage 1 will always have a pure X displacement with respect to ground.

Intermediate Stage 1 and the Motion Stage are connected by means of Flexure B that allows for relative motion in the Y direction only and constrains relative motion along X direction and rotation. This implies that the X motion of Intermediate Stage 1 will be entirely transmitted to the Motion Stage, while any Y motion of the Motion Stage will not influence the Intermediate Stage 1 at all. Thus, Intermediate Stage 1 becomes an ideal location for the application of the X actuation force. Flexure A provides the linear guide/bearing for X actuator force. Furthermore, any X force applied at Intermediate Stage 1 is incapable of producing any Y motion of the Motion Stage due to the presence of Flexure B.

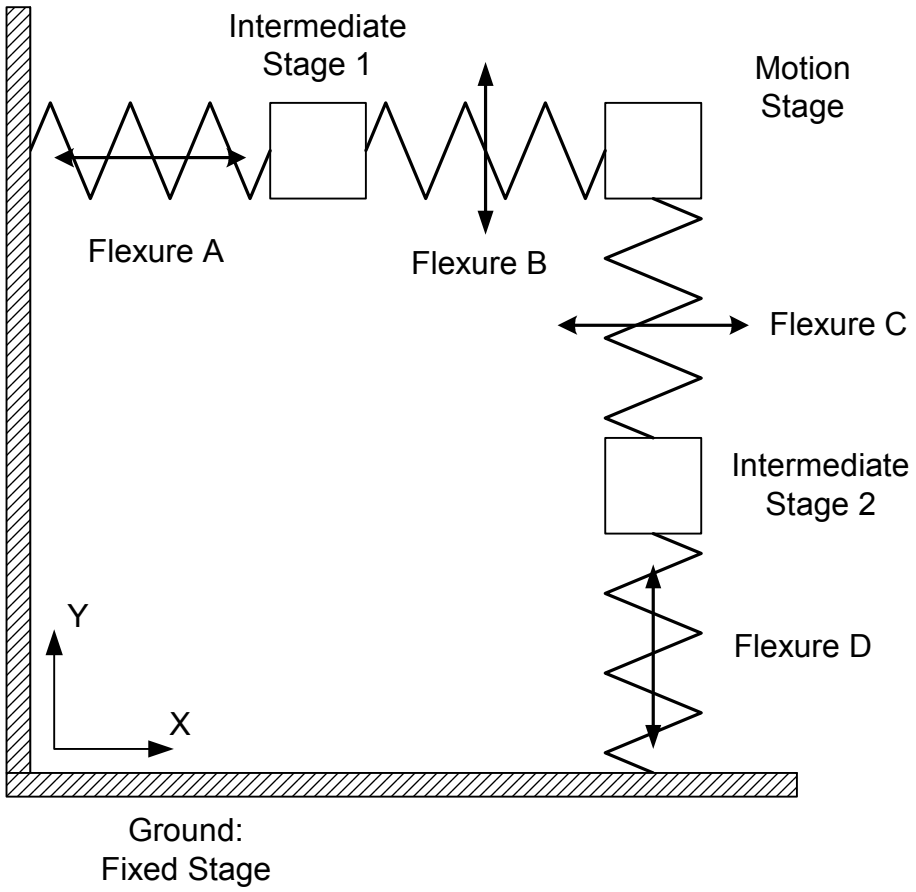

Figure 2.3 XY Flexure Mechanism Topology

On very similar lines, Intermediate Stage 2 is connected to ground by means of Flexure D, which constrains motion in X direction and rotation, but allows for perfect relative motion in the Y direction. Thus, Intermediate Stage 2 can only move along Y and shall have no motion in the X direction or rotation, no matter what the displacement of the Motion Stage is. Intermediate Stage 2 and the Motion Stage are connected via Flexure C, which allows only X motion between the two. Thus, any X motion at the Motion Stage will not affect the Intermediate Stage 2, which is therefore an ideal location for the application of Y actuation force. At the same time, all the Y motion that is generated at Intermediate Stage 2 due to the Y actuation force will be transmitted to Motion Stage, but is incapable of producing any X motion of the Motion Stage due to the presence of Flexure C.

Ideally, in any deformed configuration of the flexural mechanism, Intermediate Stage1 always has a pure X displacement while Intermediate Stage 2 has a pure Y displacement. The Motion Stage inherits the X

displacement of Intermediate Stage 1 and the Y displacement of Intermediate Stage 2, thus acquiring two translational degrees of freedom. Since all the connecting flexure units constrain rotation, the rotation of the Motion Stage is also constrained with respect to ground.

This is an idealized scenario, where units A, B, C and D are perfect single degree of freedom flexure bearings or guides. The only degree of freedom that flexures A and C allow for is relative translation along X, while Flexures B and D are compliant only in relative translation along Y. We know that in reality, such flexure units do not exist. Any flexure unit will have only a finite compliance and range of motion along its DOF, and a finite stiffness along its DOC. As a consequence of this fact, the zero parasitic error, zero cross-axis coupling and perfect actuator isolation conclusions obtained above shall be compromised, the extent of which depends on the flexure building block that is chosen. Nevertheless, we can certainly say the conclusions shall hold good at a gross or first-order level, and the undesirable interactions and deviations from ideal behavior will be higher order in nature.

Flexures are chosen for the bearing units A, B, C and D, instead of ball bearing based guides, which would have allowed for much larger ranges of motion, One reason for this decision is to achieve high motion resolution and smoothness, as explained in Chapter 1. But this is not the only reason; there is another fundamental reason why only a flexure based mechanism can work effectively in this configuration. Let us consider a rigid body version of the arrangement shown in Fig. 2.3. As earlier, if we have an ideal frictionless linear bearing as shown in Fig. 2.4a, we can go ahead and assemble four such units in the fashion proposed above, to obtain the mechanism of Fig. 2.4b, and expect that that we have attained the zero error two axis mechanism. But that is not the case. Even if we ignore the concerns of motion quality, there is a mobility problem with the mechanism shown in Fig 2.4b. Applying Grubler's criteria to this mechanism, one obtains a DOF of one, as opposed to an expected value of two. Indeed, in a general configuration this mechanism has only one degree of freedom, but in the special case when Bearings A and C are aligned perfectly parallel, and bearings B and D are aligned perfectly parallel, one constraint becomes redundant and the mechanism exhibits two degrees of freedom. The result of Grubler's analysis simply indicates that any deviation from this perfect alignment will lead to a reduction in Degrees of Freedom which shall be manifested by jamming or locking of one axis. Since the constituent bearings are perfect constraints with infinite stiffness along their DOCs, any misalignment will produce infinitely high locking forces. Thus we see that even if we had perfect single DOF building blocks or constraints, we would need an absolutely perfect manufacturing and assembly to make the above idea work. But, as is well known, this is not possible in real life.

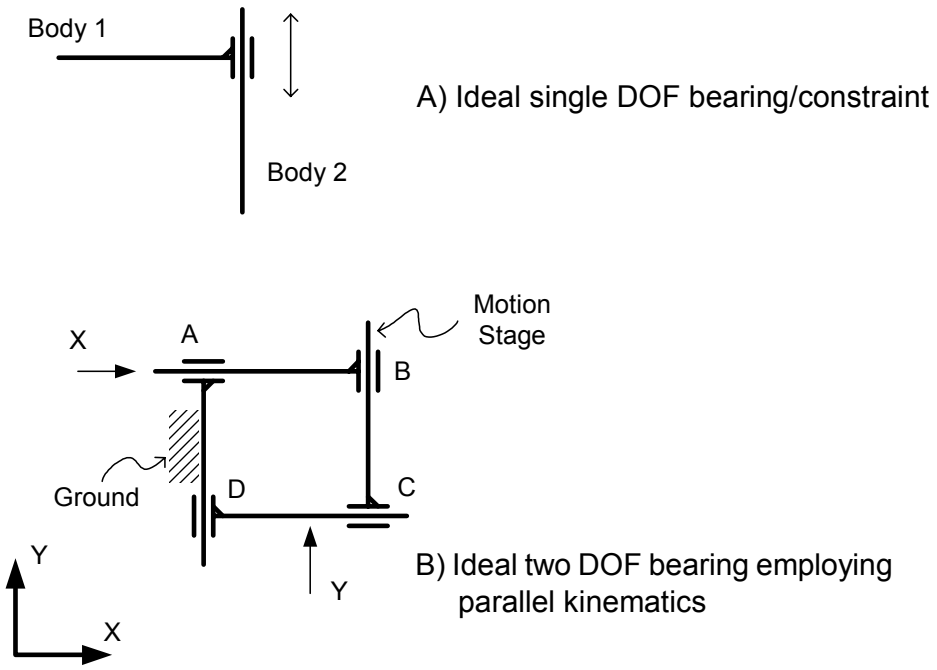

Figure 2.4 XY Linkage Mechanism Topology

The beauty of designing with flexures is that, while flexures can be blamed for being imperfect constraints and therefore producing an XY mechanism that is error prone, it is precisely this imperfection of flexures that makes the above arrangement realizable in the first place. Furthermore, any deviation from ideal behavior of the XY mechanism is exactly predictable using the principles of mechanics.

The level of manufacturing tolerances that are acceptable for the proposed XY mechanism topology to function as desired, depends on the constituent flexure units, and may be estimated using the analytical tools that shall be developed in the subsequent chapters.

This is a simple, maybe somewhat obvious, yet fundamental guideline that can be used in designing high performance planer two-axis flexural mechanisms. Any linear motion flexure unit, which in the designer's opinion comes close to the stated idealizations, can be used as a building block to produce a two DOF planer mechanism. The following sections present designs generated with three types of flexure units or building blocks: the simple beam flexure, the parallelogram flexure and the compound or double parallelogram flexure.

2.3 XY Flexure Mechanism based on the simple Beam Flexure

Although a simple beam is not a very good single degree of freedom flexure unit, nevertheless due to its simplicity it may be used as a building block in the arrangement discussed in the previous section. From beam bending analysis we know that the beam tip translates (δ) as well as rotates (θ) when it experiences a transverse force. Furthermore, it also exhibits a parasitic error motion in the X direction (ε).

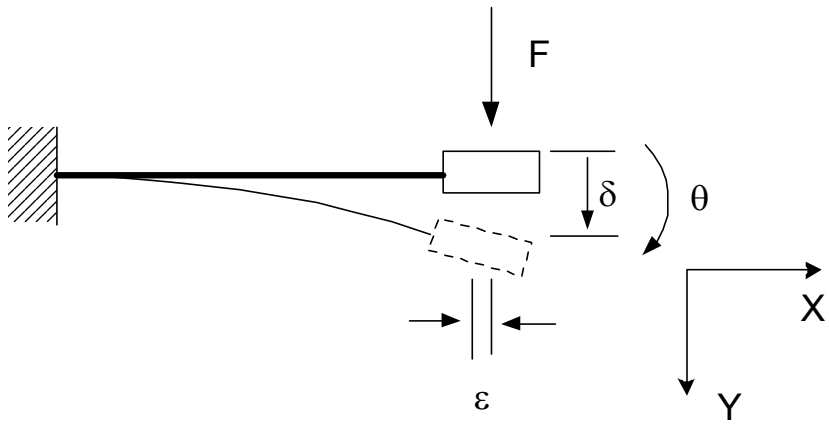

Fig. 2.5 Simple Beam

Using the beam flexure for flexure units A, B, C and D, the resulting two axis mechanism is illustrated in Fig. 2.6. This is a moderately reasonable design in terms of performance and may be used where accuracy can be compromised but space is at a premium. In-plane rotation of motion stage may be minimized by appropriate placement of actuation forces. Clearly, an X actuation force will produce a small displacement of the Motion Stage in Y direction as well, and vice versa, and therefore cross-axis coupling is present. The point of application of X actuation force on Intermediate Stage 1 also moves in the Y direction. Furthermore, an application of Y force moves the point of application of the X force. Hence, actuator isolation is not achieved either. Out of plane stiffness is low because of the overhanging motion stage.

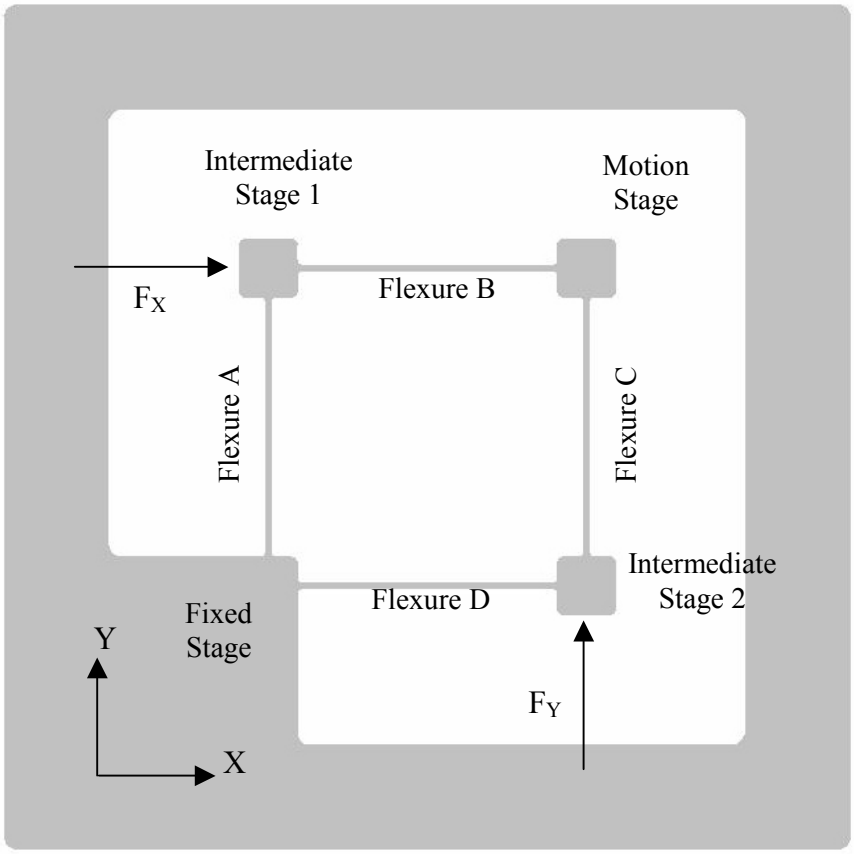

Fig. 2.6 XY Design 1

This relatively poor performance may be improved by making an insightful use of geometric symmetry where the design is mirrored about a diagonal axis, as shown in Fig. 2.7. The constraint pattern remains the same and the mechanism still has two in-plane translational degrees of freedom, once again due to the finite stiffness of flexures along their DOC. Primes denote the mirrored flexure units. On careful inspection, one can see that symmetry brings about some improvements in the performance of the XY mechanism. On the application of an X actuation force, the two sides of the mechanism tend to produce displacement of the motion stage in Y direction that oppose each other, and therefore cancel out. Out of plane stiffness is now better owing to an improved structural loop, since the motion stage in this design is supported from two sides. The design still suffers from lack of good actuator isolation. Also, there is no significant improvements in the parasitic yaw of the motion stage. Thus, we conclude that symmetry in this case may help in terms of some performance measures but doesn't bring about much improvements in others.

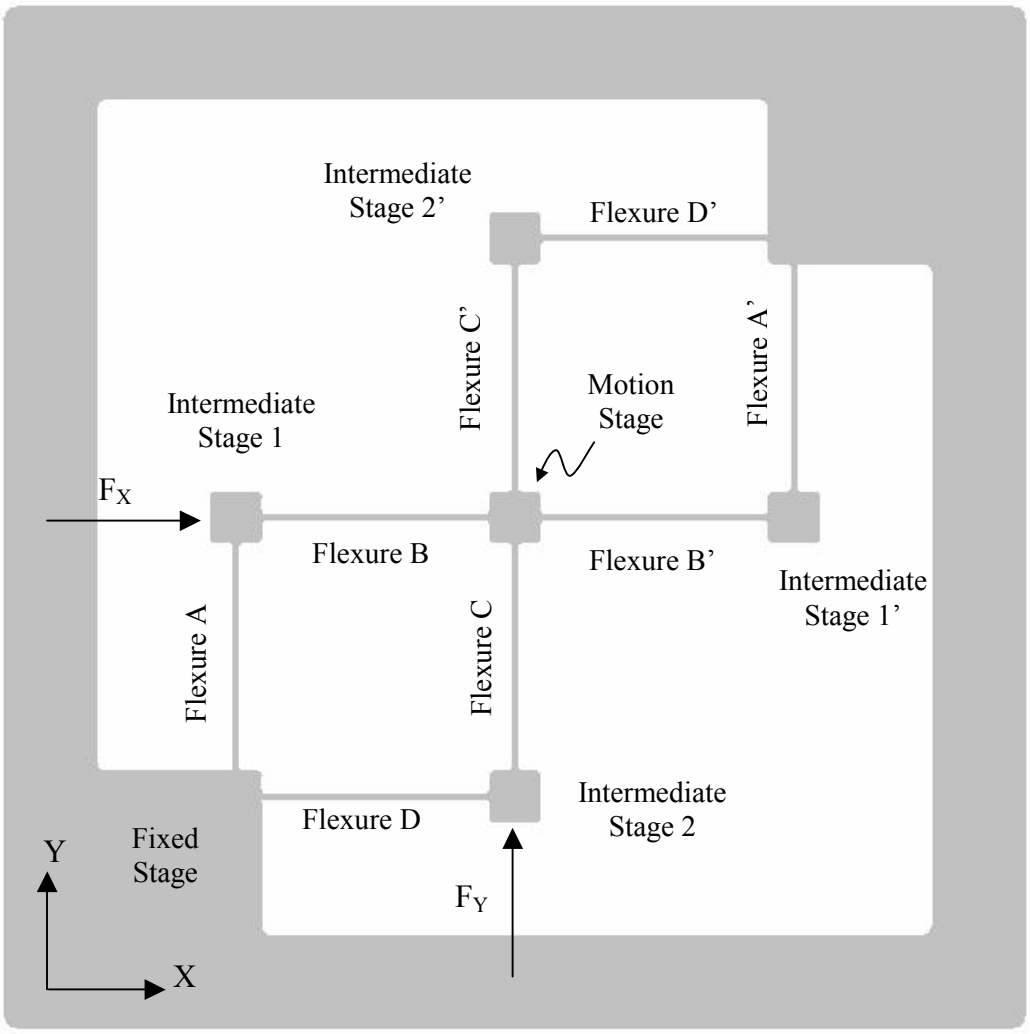

Fig. 2.7 XY Design 2

2.4 XY Flexure Mechanism based on the Parallelogram Flexure

The parallelogram flexure unit is a classic design that has been employed in many flexural mechanisms. Fig. 2.8 provides a schematic of the flexure in its deformed and undeformed configurations. Beam bending analysis can be used to predict the force-deformation characteristics of this flexure. It can be analytically shown that parallelogram flexure offers small resistance to relative motion in the Y direction but is stiff with respect to relative motion in X and rotation. Hence, it is a much better approximation for a single DOF flexure as compared to the simple beam flexure used in the previous case.

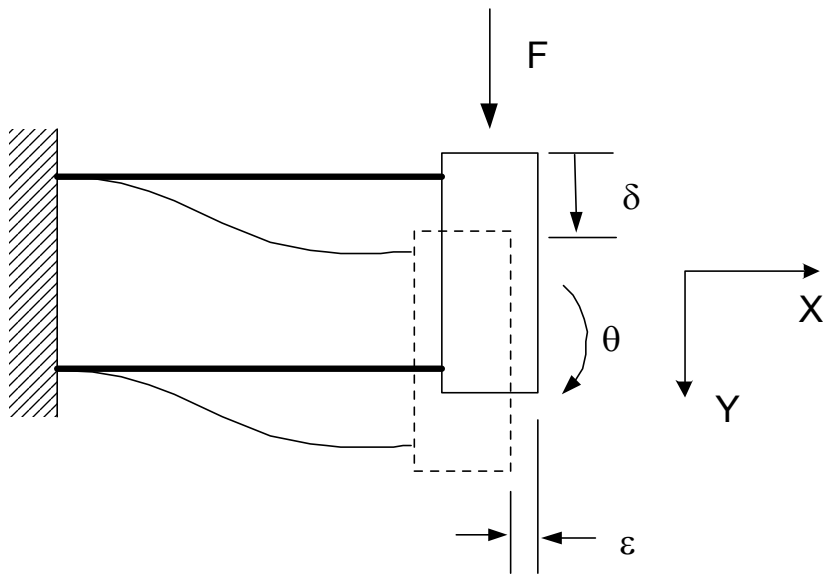

Figure 2.8 Conventional Parallelogram Flexure

However, the parallelogram flexure unit also suffers from undesirable parasitic errors. An application of force in the Y direction results in the desired motion δ, in Y direction, and also in undesired motions: ε in the negative X direction, and rotational twist θ. While θ may be eliminated by appropriate placement of the force F, ε is always present [1-2,8].

Following the design principle expounded earlier in this document, we come up with a two-axis planer flexure mechanism design, shown in Fig. 2.9, in which the parallelogram flexure is used for Flexure Units A, B, C and D. This is a better design in terms of performance as compared to the one illustrated in Fig. 2.6. The accuracy is better but nevertheless undesired motions still exist. In-plane rotation of the Motion Stage in constrained quite well because the parallelogram flexure unit is considerably stiff in rotation. An X actuation force still produces a small displacement of the Motion Stage in the Y direction, and vice versa. The point of application of X actuation force also moves slightly in the Y direction during force application. Furthermore, an application of X force moves the point of application of the Y force. Hence perfect actuator isolation is not achieved in this case either. Since the motion stage is supported only from one side, out of plane stiffness is also relatively low.

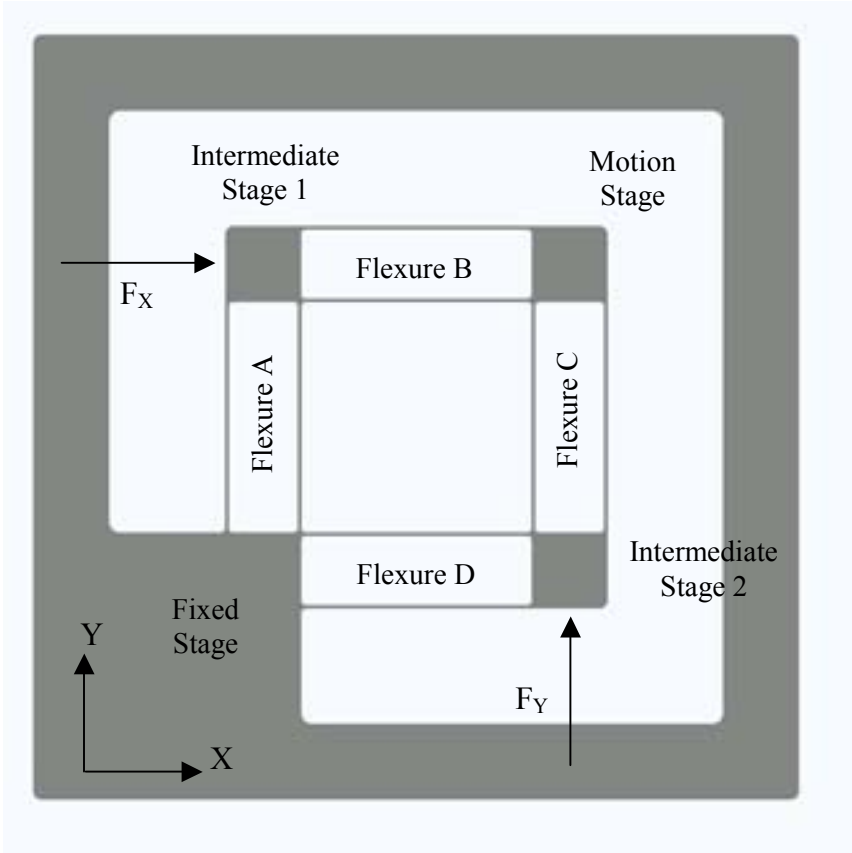

Figure 2.9 XY Design 3

Some of the above performance measures are improved, once again, by exploiting geometric symmetry as shown in Fig. 2.10. Due to their finite stiffness, the additional flexure units do not over-constrain the mechanism. This symmetric arrangement should result in several performance improvements. The motion stage yaw should be further reduced to due to the additional rotational constraints arising from the parallelogram flexures. On the application of an X actuation force, the two sides of the mechanism tend to produce displacements in Y direction that counter each other, and therefore reduce the cross-axis coupling errors. Out of plane stiffness also improves due to better support of the motion stage. Perfect actuator isolation is still not achieved in this design.

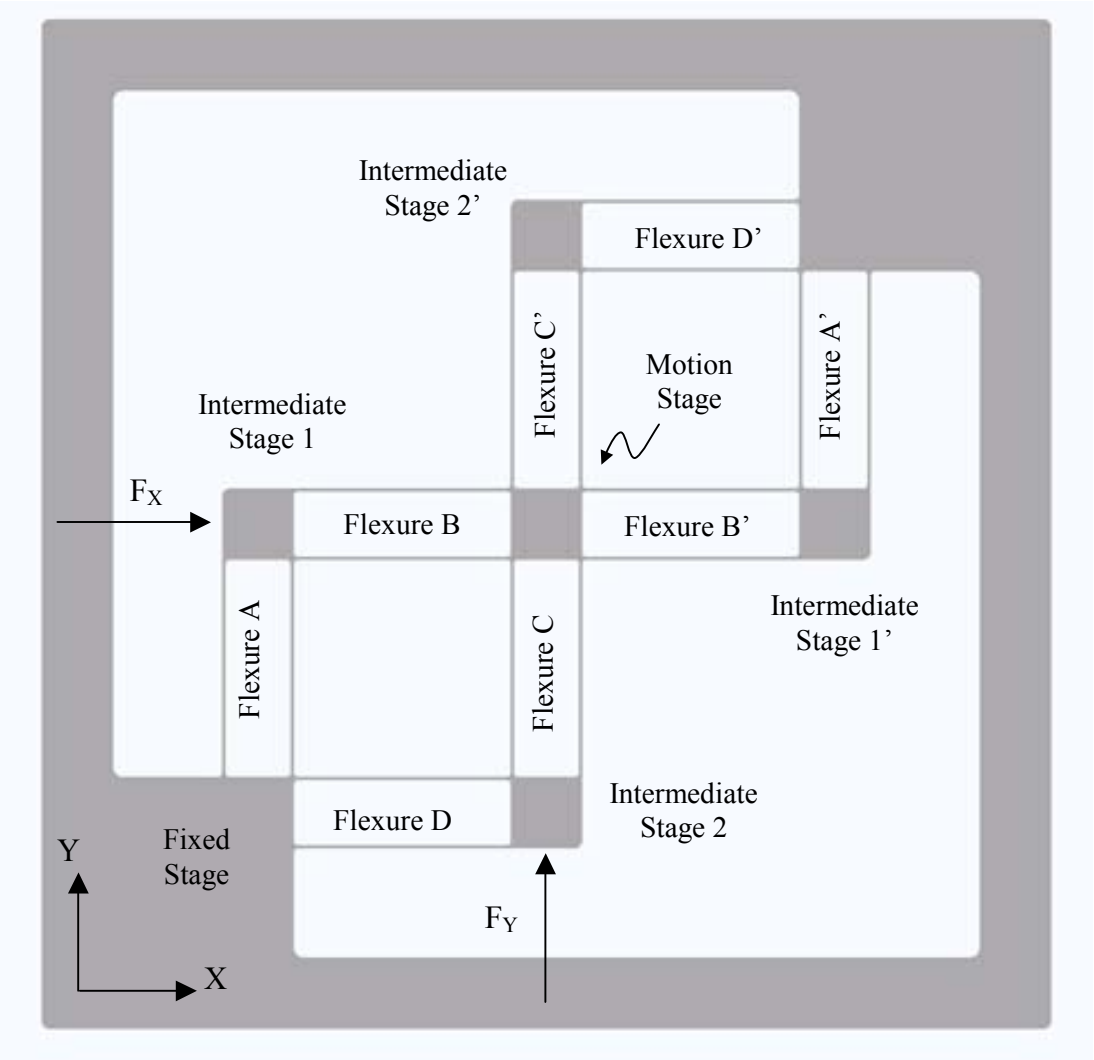

Figure 2.10 XY Design 4

Before proceeding to the next building block, we would like to point out that new features may be added to this design, which enhance its functionality. For example, small horizontal blades may be introduced in the mechanism in a manner as shown in Figure 2.11. The vertical blades belong to the original two-axis flexural mechanism design and the horizontal blades are new additions that now enable out of plane motion as well. By appropriately positioning these horizontal blades each of the intermediate stages, and the motion stage can be imparted with a Z degree of freedom.

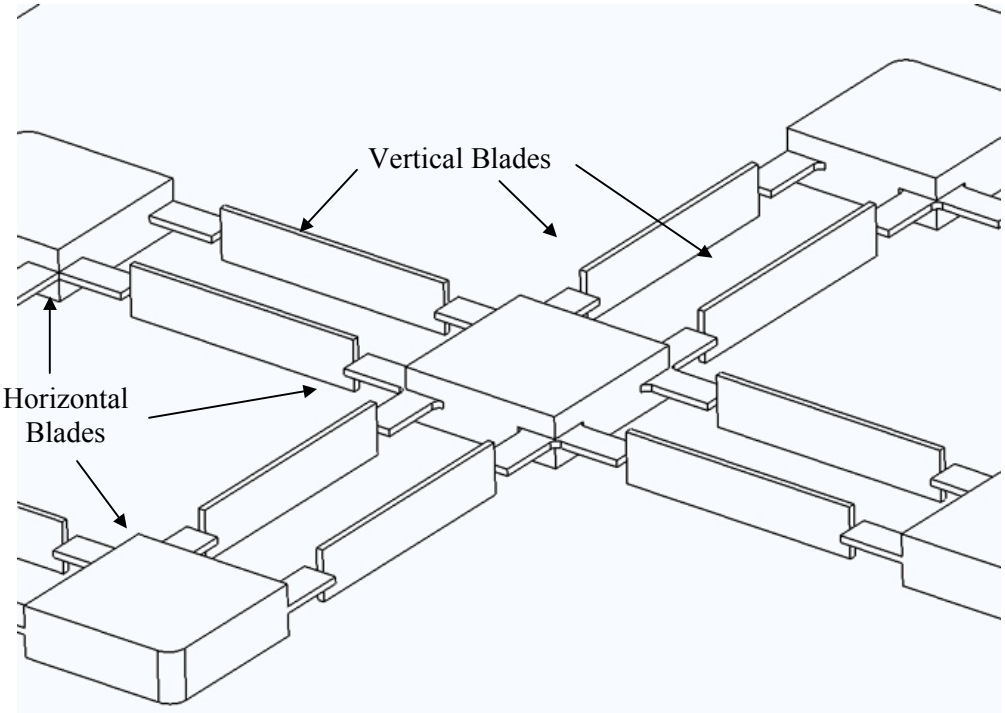

Figure 2.11 Combination of vertical and horizontal blades provides in-plane and out-of-plane motion

By choosing actuator forces as shown in Figure 2.12, we can add another three out-of-plane degrees of freedom to the planer mechanism: translation of the Motion Stage along Z, and its rotations about the X and Y axes. If we choose to apply a Z direction force only on the Motion Stage, we obtain a three DOF mechanism with compliance in X, Y and Z directions.

Normal forces F_{xz1} and F_{xz2} acting on opposite intermediate stages result in rotation of the Motion Stage about the X-axis and similarly forces F_{yz1} and F_{yz2} produce a rotation about the Y axis. A combination of these four vertical forces can be used to generate any arbitrary motion along Z and angular twists about X and Y, adding three DOF. Once again, this could not have been possible in a rigid link mechanism, and is achievable only because we are using flexures.

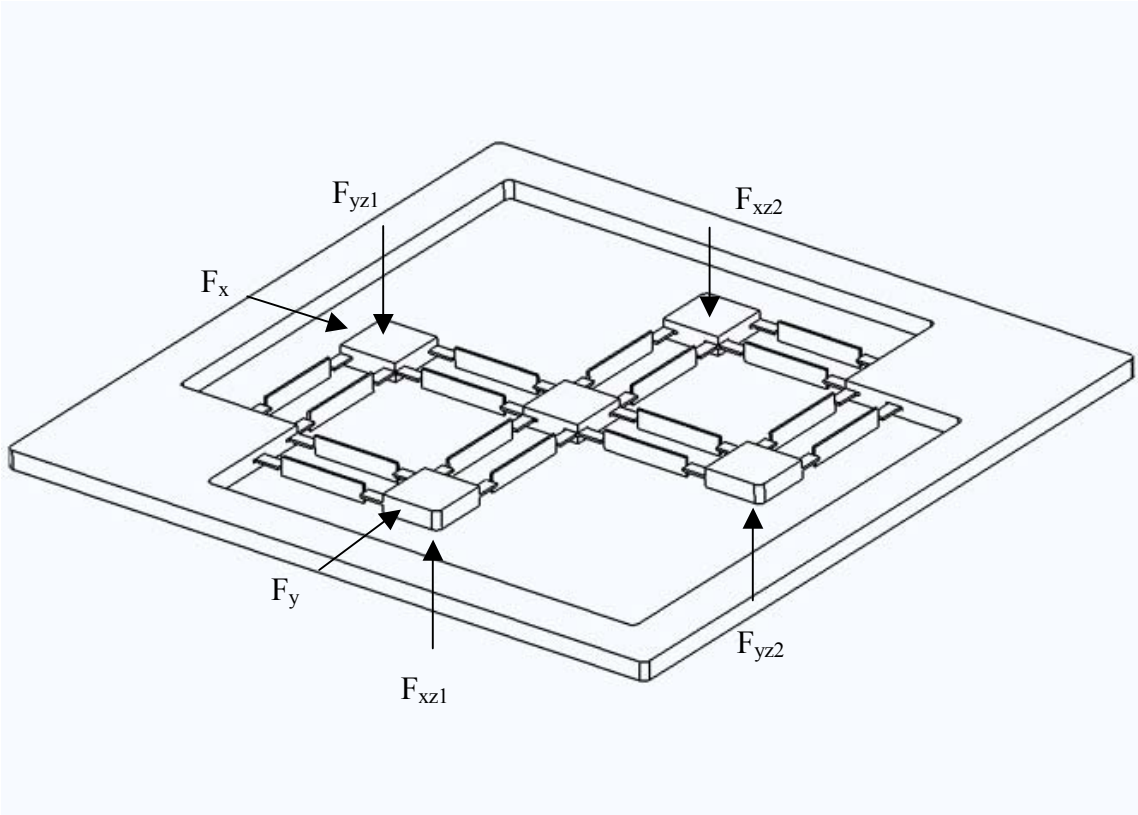

Figure 2.12 XYZ$\theta_x\theta_y$ Design 1

We can thus get five degrees of freedom from a planer flexure. The three newly added degrees of freedom fall in the traditional parallel kinematic topology category. Consequently, actuator isolation is poor for the out-of-plane actuators. Any out-of-plane motion of the intermediate stage causes the point of application of the in-plane forces to move. Similarly, any in-plane motion will cause the points of application of the normal forces to shift.

It is may be noticed that many of the anomalies of this design and the XY design of Fig. 2.10 are a consequence of using the parallelogram flexure unit, which has some inherent error motions. We therefore shift attention to other potential flexure units.

2.5 XY Flexure Mechanism based on the Double Parallelogram Flexure

Next, we use the double parallelogram flexure unit, shown in Fig. 2.13, as the building block for two-axis planer flexural mechanisms. In some of the technical literature this flexure unit is also referred to as a *compound parallelogram flexure*, *folded-beam flexure* or *crab-leg flexure*.

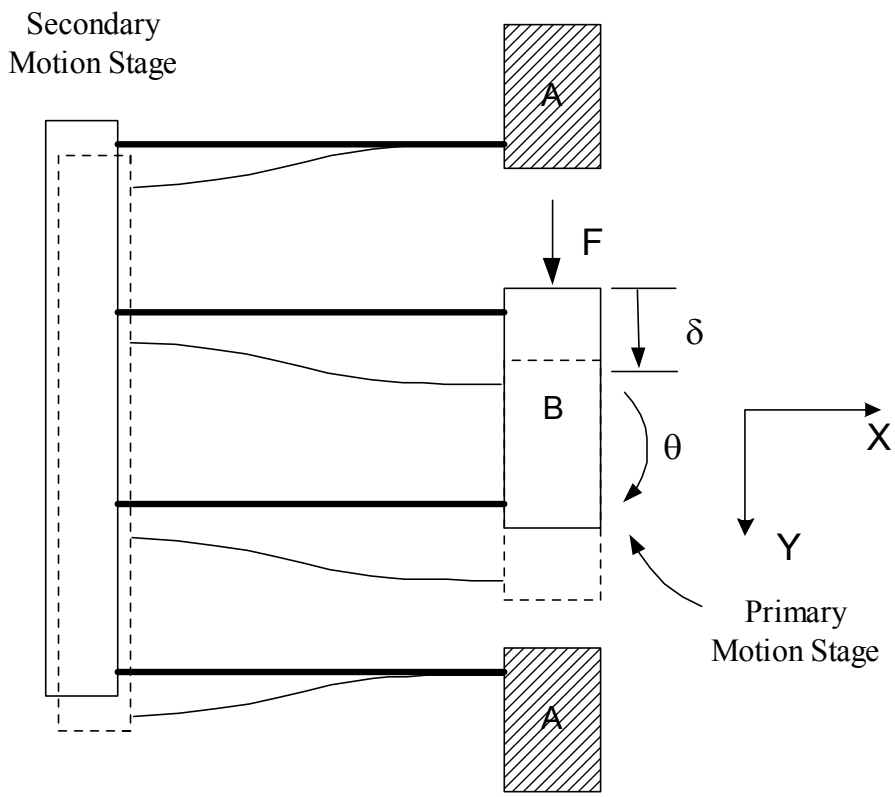

Figure 2.13 Double Parallelogram Flexure

Analysis shows that this flexure allows relative Y translation between bodies A and B, but is stiff in relative X displacement and rotation, although not as stiff as the parallelogram flexure. The parasitic error ε , along X direction, is considerably smaller because any length contraction due to beam deformation is absorbed by a secondary motion stage. There does exist a rotational parasitic motion, which may be eliminated by appropriate location of the Y direction force. Hence, body A exhibits perfect Y-translation with respect to body B on the application of a Y direction force. These statements are true only in the absence of X direction forces.

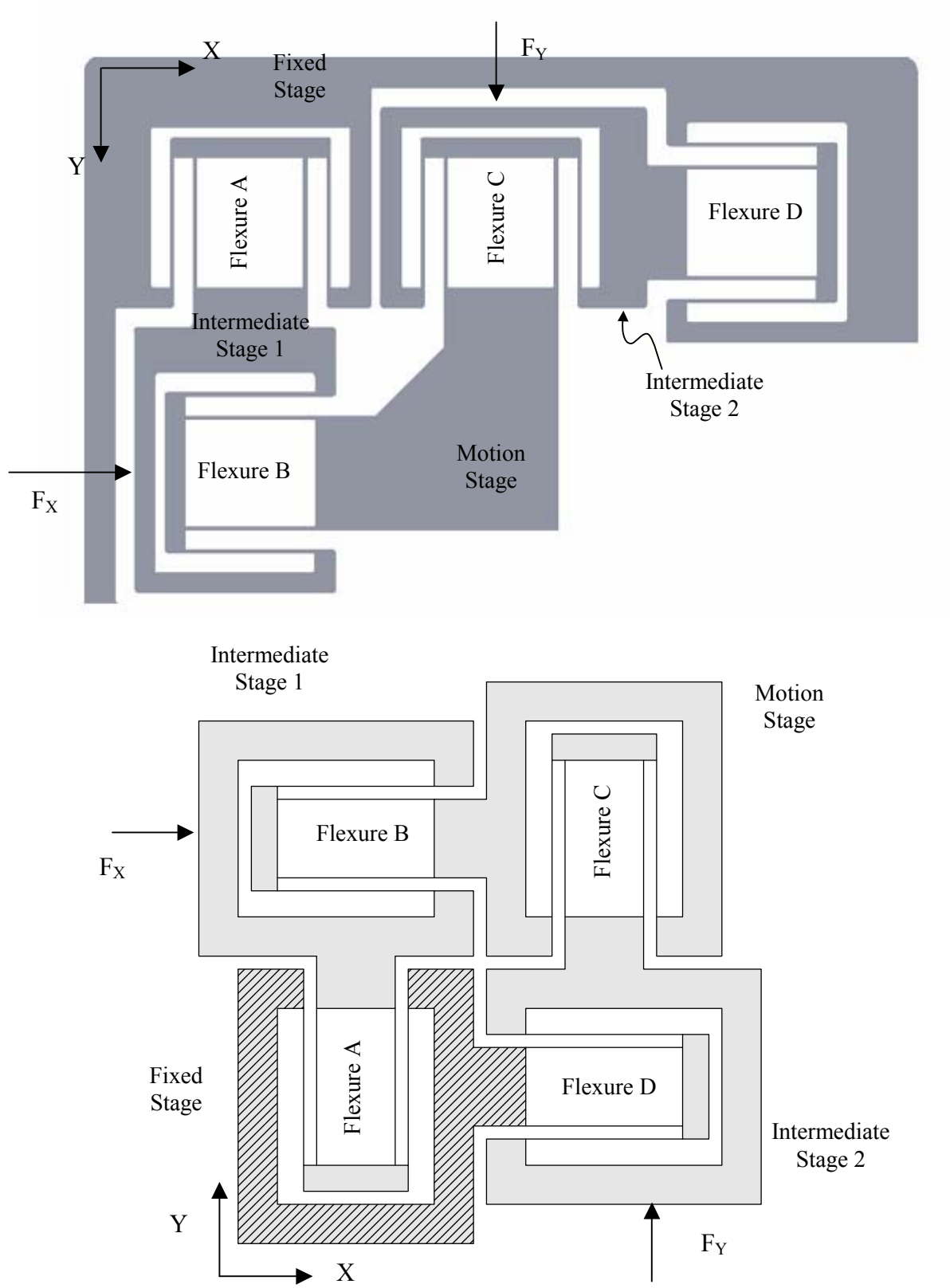

Figure 2.14 XY Design 5a and 5b

This time, the double parallelogram may be employed to construct XY mechanisms as shown in Fig 2.14. In these cases, cross axis coupling and motion stage yaw should be small and actuator isolation should also be better than previous designs. Further improvements may be obtained by mirroring the design as shown in Fig. 2.15.

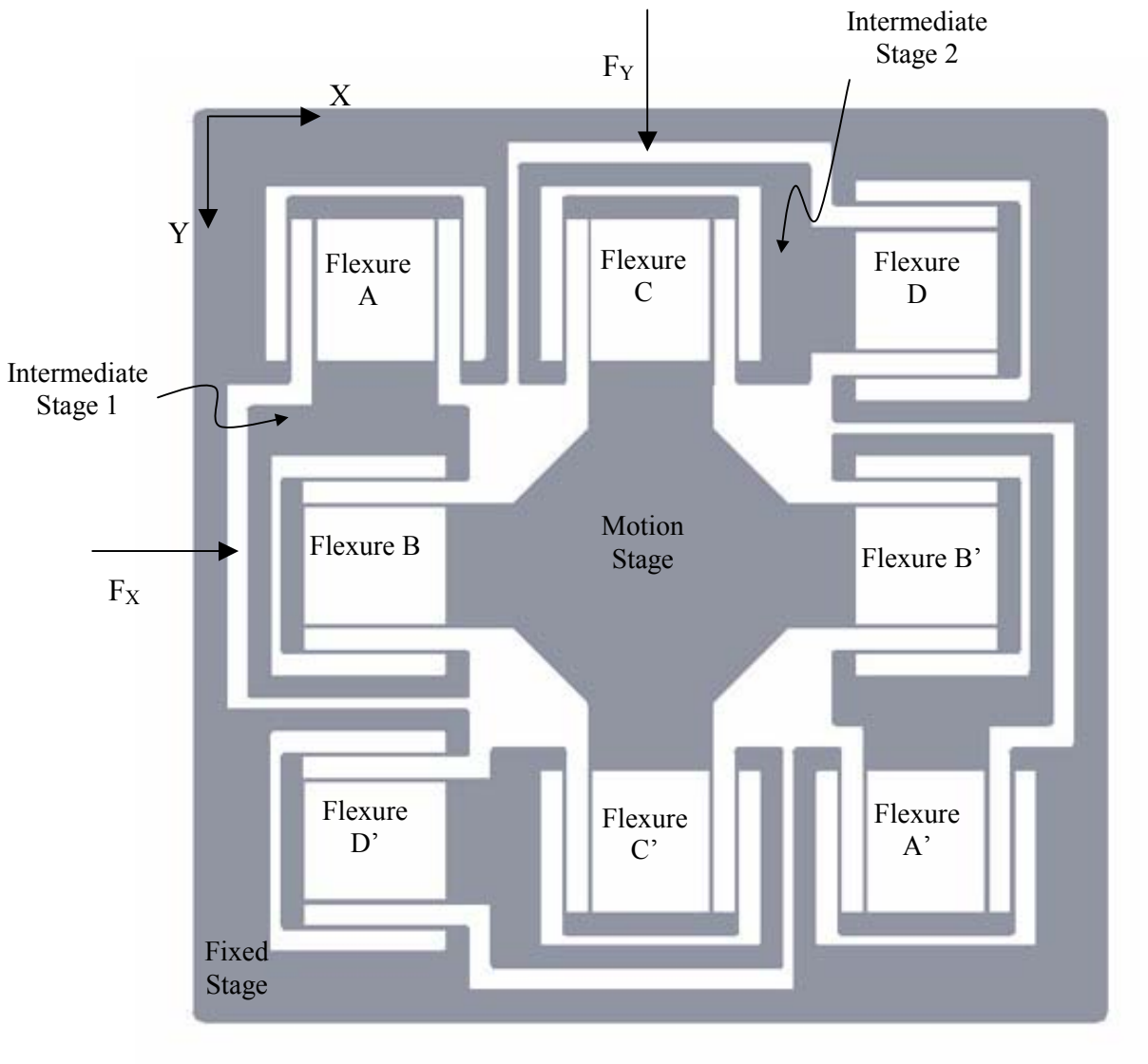

Figure 2. 15 XY Design 6: 'Biflex'

Apart from enhancement in the performance measures, the out-of-plane stiffness is also significantly improved because the motion stage is supported from all sides. More importantly, symmetry should make the design more robust against manufacturing variations and assembly errors. Furthermore, the double parallelogram flexure is fairly insensitive to uniform thermal disturbances, because the change in the beam lengths due to thermal disturbances is readily absorbed by the secondary motion stage. Based on this argument, one may conclude that the XY Mechanism Designs generated from the double parallelogram flexure are also better suited to reject any thermal variations. Furthermore, the XY Design of Figure 2.15, which we refer to as the 'Biflex', also allows for better space utilization and therefore has better specific range.

We can now impart out-of-plane motion to the planer mechanism by introducing horizontal blades in some of the double-parallelogram units, as shown in Figure 2.16. Horizontal blades are added such that the intermediate stages themselves do not have any significant Z motion. The secondary motion stages of the double-parallelogram flexures, the motion of which is inconsequential, are the ones that attain out of plane motion.

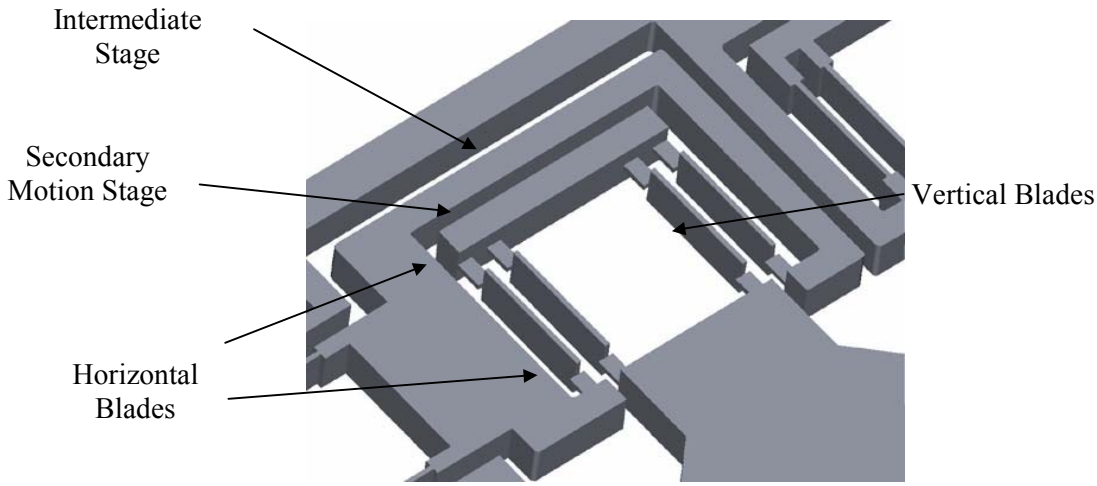

Figure 2.16 Vertical and horizontal blades produce in-plane and out-of-plane motion

Referring to Figure 2.17, by applying normal actuator forces, we can add another three out-of-plane degrees of freedom to the planer mechanism: translation of the Motion Stage along Z, and its rotations about X and Y axes. We may also choose to apply a single Z direction force on the Motion Stage, to obtain a three DOF mechanism with compliance in X, Y and Z directions.

Normal forces F_{xz1} and F_{xz2} result in a rotation of the motion stage about the X-axis and similarly forces F_{yz1} and F_{yz2} produce a rotation about the Y-axis. A combination of these four vertical forces can be used to generate any arbitrary motion along Z and angular twists about X and Y. It is important to observe that the normal forces are not applied on the intermediate stages; rather, they are applied on the secondary motion stages of the four double-parallelogram flexure units that support the Motion Stage. This isolates the normal forces from the in-plane forces to some extent. The affect of normal forces on the points of application of in-plane forces, is far less severe, thus improving actuator isolation. Furthermore, the out-of-plane rotations are much better decoupled as compared to the design of Fig. 2.12

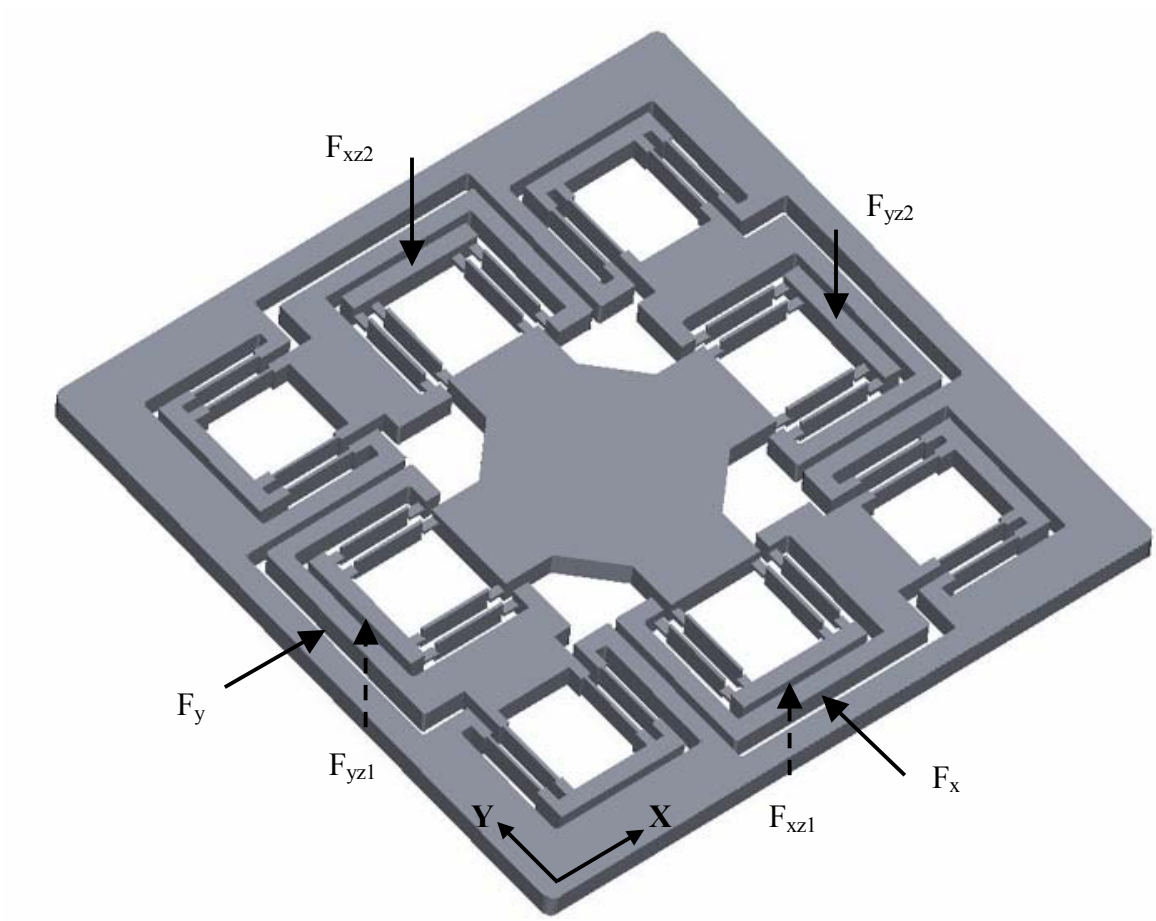

Figure 2.17 XYZ$\theta_x\theta_y$ Design 2: 'Pentaflex'

It may be noticed that while the XY design of Fig. 2.15 is rotationally symmetric, it lacks in symmetry about any axis in the XY plane. While it is yet to be seen if this has any significant effect on the performance, a yet another topology with even higher degree of symmetry is illustrated in Fig. 2.16. The evolution from XY Design 6 to XY Design 7 should be obvious.

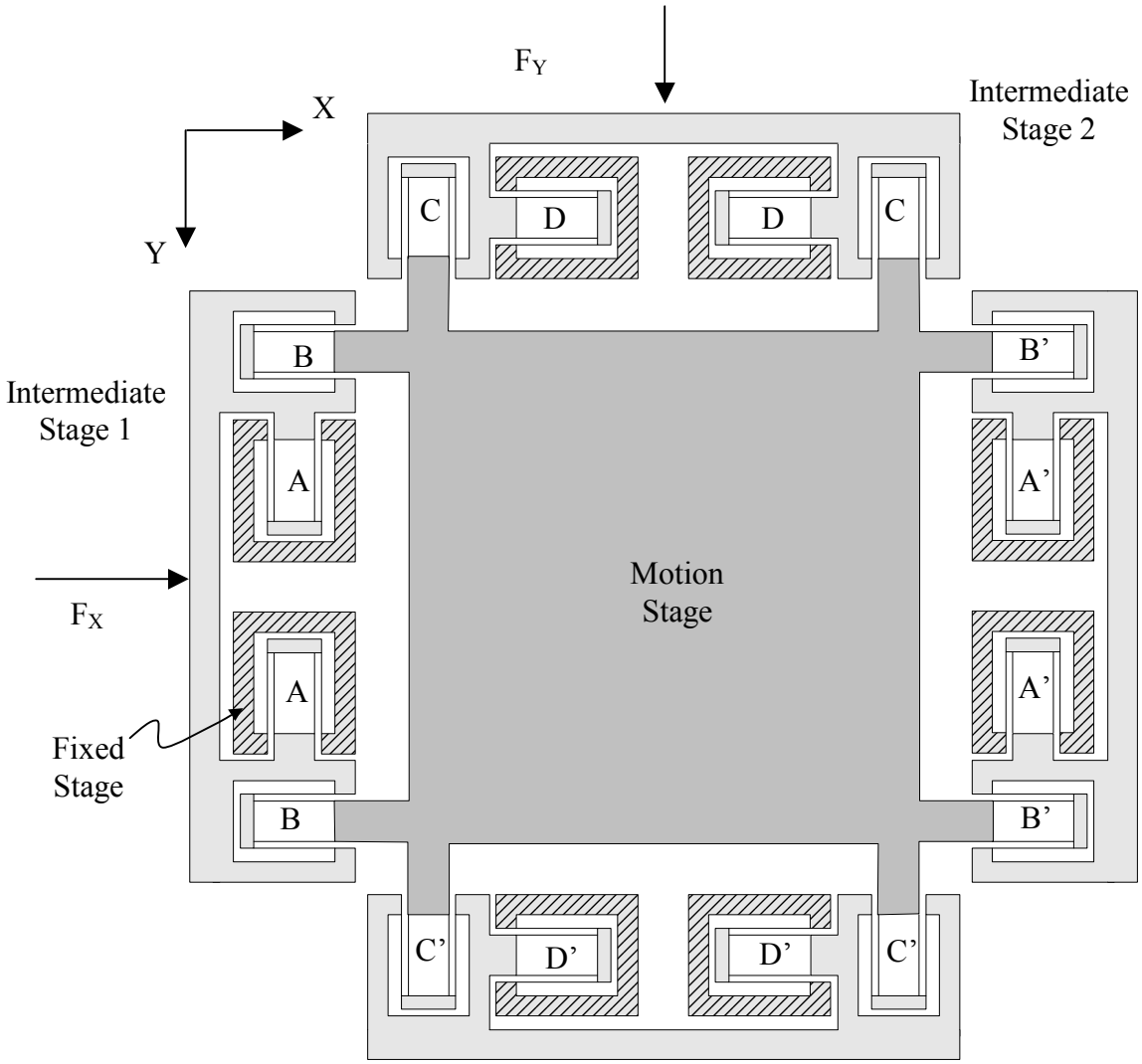

Fig. 2.16 XY Design 7

With smaller beams lengths in the constituent double parallelograms, this mechanism will have a smaller specific range. With respect to all other performance measures, like cross-axis coupling error, parasitic yaw error, out of plane stiffness, and actuator isolation, this appears to be better than the previous designs. Also, because of the increased number of flexures, elastic averaging will play an increasingly important role in making the design more tolerant to manufacturing variations. Such conjectures need to be verified by means of the analytical tools that shall be presented in the subsequent chapters.

Of course, several other XY designs can be generated based on the construction of Fig. 2.3. Any flexure unit that produces error-free single axis translation can be used as a building block for two-axis planer mechanisms. For example, the multiple beam parallelogram flexure, shown in Fig. 1.2b, is a promising candidate. Adding further beams to the conventional parallelogram flexure, increases the stiffness in the DOC and DOF in the same proportion. This is better than simply increasing the thickness of beams in a parallelogram flexure, which increases the DOF by a cubic factor. Multiple beams may be used in a parallelogram arrangement, without resulting in an overconstraint, because of the phenomenon of elastic averaging. Furthermore, a combination of different flexures units can also be used in constructing the XY mechanism. For example, one may use double-parallelogram units for Flexures A and D, and parallelogram units for Flexures B and C. Of course the suitability of one design over the other depends entirely on the requirements of an application.

Based on the challenges and trade-offs associated with parallel kinematic flexures, it appears that designing a large range of motion XYθ mechanism is no simple task. One may attempt this by extending the ideas presented here to a third in-plane axis. In fact, a three dimensional XYZ flexure mechanism, which allows for ground mounted actuators and large ranges of motion along its three substantially decoupled DOF, is proposed in Appendix A. But for the purpose of this thesis, we shall limit ourselves to XY planer mechanisms only.

In this chapter, we have proposed several XY flexure designs based on simple flexure units. In general, these mechanisms have a large range of motion because they avoid some of the limitations the arise in the conventional parallel mechanism designs. While we have made qualitative estimates about the advantages and disadvantages of each embodiment, the exact performance of these designs, including the range of motion prediction, remains to be evaluated analytically and experimentally. It has also become clear that not only the transverse, but also the axial stiffness properties of a flexure unit are very important. In parallel kinematic mechanisms such as the ones proposed here, each flexure unit or building block performs two distinct functions – that of providing DOF along one direction, and DOC along other directions. Therefore, the force displacement relationship of the flexure unit along each direction, and more importantly its dependence on the forces and displacements in other directions, plays a key role in determining the performance attributes such as variation in stiffness, cross-axes coupling, parasitic errors and actuator isolation, of the overall flexure mechanism.

With this understanding, we proceed to Chapters 3 and 4, which present these force-displacement relationships in a parametric form. These results then allow us to deterministically evaluate the performance of the designs proposed here, which is done in Chapter 5.

This page is intentionally left blank.