Chapter 1. Introduction

1.1 Flexures

Flexure mechanisms are a designer's delight. Except for the limits of elasticity, flexures present few other boundaries as far as applications are concerned. Flexures have been used as bearings to provide smooth and guided motion, for example in precision motion stages; as springs to provide preload, for example in the brushes of a DC motor or a camera lens cap; to avoid over-constraint, as in the case of bellows or helical coupling; as clamping devices, for example, the collet of a lathe; for elastic averaging as in a windshield wiper; and for energy storage, such as, in a bow or a catapult. This list encompasses applications related to the transmission of force, displacement as well as energy, thereby making the versatility of flexures quite evident.

Flexures are compliant structures that rely on material elasticity for their functionality. Motion is generated due to deformation at the molecular level, which results in two primary characteristics of flexures – smooth motion and small range of motion. From the perspective of precision machine design, one may think of flexures as being means for providing constraints. It is this capability of providing constraints that make flexures a specific subset of springs. In fact, all the applications listed above may be resolved in terms of constraint design.

The importance of properly constrained design is well known to the engineering community [1-5]. The objective of an ideal constraining element, mechanism, or device is to provide infinite stiffness and zero displacements along certain directions, and allow infinite motion and zero stiffness along all other directions. The directions that are constrained are known as *Degrees of Constraint* (DOC), whereas the directions that are unconstrained are referred to as *Degrees of Freedom* (DOF)[1]. While designing a machine or a mechanism so that it has appropriate constraints, the designer faces a choice between various kinds of constraining elements, two of which are considered in Fig. 1.1 for comparison: ball bearings and flexures.

Clearly, ball bearings meet the definition of a constraint quite well, since they are very stiff in one direction, and provide very low resistance to motion in other directions. Nevertheless, motion in the direction of DOF is associated with undesirable effects such as friction, stiction and backlash, that typically arise at the interface of two surfaces. These effects are non-deterministic in nature, and limit the motion quality.

[1] A more careful definition for DOF and DOC shall be discussed in the subsequent chapters.

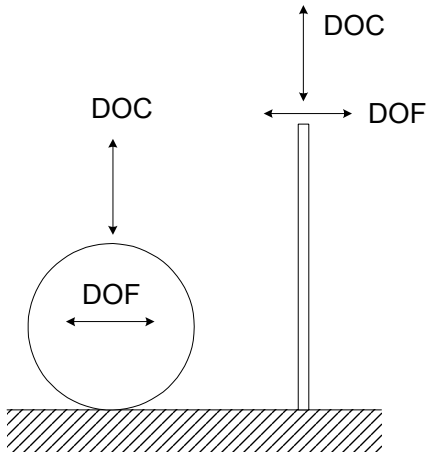

Fig. 1.1 Examples of typical constraint elements

Flexures, on the other hand, allow for very clean and precise motion. Since the displacement in flexures is an averaged consequence of molecular level deformations, the phenomena of friction, stiction and backlash are entirely eliminated. The questionable issue here, though, is the effectiveness of flexures in terms of providing constrained motion. Consider, for example, a thin strip of spring steel, which is a common flexure element, as illustrated in Fig. 1.1. It is obvious that the steel strip is very stiff in tension, producing a DOC, and compliant in flexion, resulting in some DOF. Yet, neither is the stiffness along the DOC infinite, nor is the range of motion along the DOF infinite. Furthermore, the stiffness values along the Degrees of Freedom and Constraint may vary with load and deformation, which is yet another critical deviation from ideal constraint behavior.

Thus, there exists a tradeoff between two important attributes in constraint elements – quality of motion along the DOF and quality of constraint along the DOC. In ball bearings, the quality of the DOC is close to ideal but the quality of motion along the DOF is compromised. Typically, a motion accuracy better than 0.1 micron is difficult to achieve [2]. In the case of flexures, while the quality of motion is several orders of magnitude better, the quality of constraint may be non-ideal. Despite this, there are at least two reasons that make flexures very desirable as constraint elements in mechanisms where small motion is acceptable. One, they are elegantly simple in construction and assembly and thus score over options like air bearings and magnetic bearings. Second, although the constraining effect of a flexure may not be ideal, it is repeatable and thoroughly predictable. Principles of mechanics provide all the tools that are necessary to determine the force-displacement characteristics of flexure mechanisms.

In fact, the non-ideal constraint behavior of flexures is not entirely a drawback. Finite stiffness along the DOF and DOC may be cleverly used to advantage in preloading and elastic averaging, respectively. For

example, while a multiple parallelogram rigid link mechanism (Fig.1.2a) is prone to over-constraint, a multi-parallelogram flexure mechanism (Fig. 1.2b) is not only feasible but also results in some performance improvements.

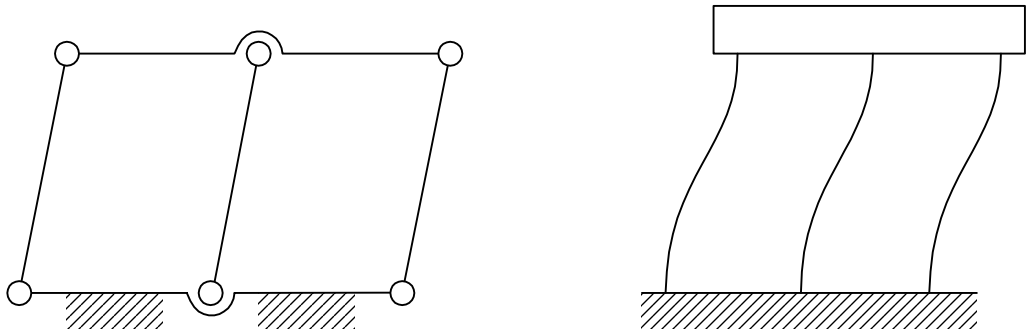

Fig. 1.2 a) Multiple parallelogram linkage mechanism b) Multiple parallelogram flexure mechanism

In applications such as nanometric positioning, the high quality motion attribute of flexures so strongly outweighs any limitations that most existing nanopositioners are essentially based on flexures. A further advantage of using flexures is that the trouble of assembly can be minimized by making the mechanism monolithic. This makes flexures indispensable for micro-fabrication, where assembly is generally difficult, or even impossible. Thus, despite small range of motion and a fundamental performance tradeoff between the DOF and DOC, flexures remain important machine elements.

1.2 Background

Given the wide applicability and advantages of flexures, there exits a considerable amount of design knowledge on these devices [1-19]. A historical background of flexures is presented in several texts [6-8]. While flexure design has been traditionally based on creative thinking and engineering intuition, analytical tools can aid the design conception, evaluation and optimization process. Consequently, a systematic study and modeling of these devices has been an active area of research.

Some of the existing literature deals with precision mechanisms that use flexures as replacements for conventional hinges, thus eliminating friction and backlash [7-10]. Analysis and synthesis of these mechanisms is simply an extension of the theory that has already been developed for rigid link mechanisms, except that in this case the range of motion is typically small. The key aspect of these mechanisms is flexure hinge design [10-12]. Unlike these cases where compliance in the system is limited to the hinges, other flexure mechanisms exist in which compliance is distributed over a larger part of the

entire topology[1-10, 16-19]. Both these kinds of mechanisms offer a rich mine of innovative and elegant design solutions for a wide range of applications.

Any systematic flexure design exercise has to be based on performance measures. While detailed performance measures can be laid out depending on specific applications, a general set of measures are highlighted here. These measures are based on the deviation of flexures from ideal constraints.

One set of important performance measures are the Degrees of Constraint and Freedom of a flexure mechanism. While Gruebler's criteria may be used for the constraint analysis of rigid-link mechanisms connected by flexible hinges [7-9], distributed compliance mechanisms pose significant challenges. Modifications to Gruebler's criteria based on a compliance number concept have been made to encompass compliant mechanisms as well [20-22]. Nevertheless, a generalized definition for DOF and DOC of a flexure element or mechanism, that addresses issues related to variable stiffness and over-constraint, is not readily available in the current literature.

Another important performance measure in flexure mechanisms is accuracy of motion. Any deviation from the intended motion trajectory may be termed as undesired motion or parasitic error motion [1-2,8]. Even though repeatability in flexure mechanisms is guaranteed because of continuum elastic medium, parasitic error motions affect the motion accuracy. Despite the importance of error motions in determining the performance of flexure mechanisms, the current literature discusses these terms in the context of specific mechanisms, and does not provide a broader definition based on qualitative and quantitative analyses. Typically, designers strive to eliminate or minimize these errors by making insightful use of geometry and symmetry.

The stiffness values along the DOF and DOC of a flexure mechanism are key dynamic performance measures while designing a motion system. Apart from damping, which is often added externally, the stiffness and mass properties of the mechanism determine its dynamic characteristics. While masses remain constant, stiffness may vary with displacements. In motion control applications, it is important to exactly characterize this variation in stiffness so that the controller in a feedback scheme may be designed to be robust against such variations. Such variations in the stiffness are commonly not addressed in flexure design. While, it may not be obvious immediately, parasitic errors, cross-axis coupling, variation in stiffness with deformations, DOF and DOC are all very related concepts and cannot be dealt with in isolation.

As observed earlier, small range of motion is inherent to the nature of flexures. The maximum allowable range of motion therefore also becomes a key performance metric for a flexure mechanism. Range of motion depends on static and fatigue failure criteria, all of which are well researched and documented

[23]. Measures such as sensitivity to thermal disturbances and manufacturing tolerances are also very important in characterizing the performance of a flexure mechanism, but are generally application specific.

The above-mentioned static and dynamic performance measures are only some of the most important considerations in flexure mechanism design. Based on such performance measures, many researchers have attempted the analysis and synthesis of flexure mechanisms. The biggest tradeoff in any analysis method is that between the generality of the theory, computational complexity involved, and scope of results. On one extreme are Finite Elements based methods that can be used for mechanisms of any shape and size, are computationally intensive, and provide little parametric information. On the other hand are simplified models, for example, pseudo-rigid-body models [9,16] that involve less computational complexity, provide parametric performance information, but are limited in their scope of application. Computationally efficient matrix based methods with macroscopic building blocks also exist for the small range motion analysis of 3D mechanisms [19]. But in general, analysis is not as big a challenge in flexure design as is synthesis.

Synthesis boils down to the simple question – how does one create a new flexure mechanism to meet certain requirements? Because of the vast and open-ended nature of mechanism design space, the answer remains somewhat elusive. Most designers rely on their intuition and experience for this step. Yet, for the sake of systematization, mechanism design is generally broken down into three hierarchies, topology synthesis, shape synthesis and size synthesis [17, 18]. Shape and size, in this context, refer to the shape and size of individual elements or building blocks that constitute a topology. Given a topology, there are several deterministic means of achieving shape and size synthesis. For mechanisms with compliance limited to the hinges, or those which can be approximated using pseudo-rigid-body models, there are methods of kinematic synthesis [24] and kinetostatic synthesis [14]. For mechanisms with distributed compliance, advanced methods based on structural optimization exist [25-27].

Topological synthesis of mechanisms has also been attempted based on multi-objective structural optimization using numerical and analytical techniques [25, 28-30]. While analytically very powerful, it is seen that these synthesis methods result in a somewhat narrow family of designs, which may be attributed to the fact that these optimization routines work within a specified design space. Numerical or analytical optimization is best suited for shape and size synthesis, when a topology already exists. In the true sense of synthesis, there really does not exist any topological or conceptual design methodology that can produce the best mechanism that will meet a given set of motion, force or stiffness requirements. A combination of creative thinking, aided with analytical tools and optimization techniques is probably the best available recipe for flexure mechanism design.

1.3 Flexure Mechanisms for Motion Control

One of the primary applications of flexures is in the design of motion stages. A motion system is typically comprised of some fundamental components – payload stage, payload bearing system, actuator, sensors and a control strategy. When highly precise motion is desired, each of these components has to be chosen or designed carefully. Although flexures provide excellent payload bearings in terms of precise motion, the design of the motion system is not simply limited to the design of the flexure bearing, but has to encompass all the other components.

Numerous single DOF and multi DOF flexure systems have been presented in the technical literature, some of which are referenced in [31]. It is generally less difficult to design a single DOF motion system [32-35] because one does not have to worry about the interaction between the components of the various axes. Motion, actuation and sensing all take place in one direction only. To achieve large range of motion and yet high resolution, the use of coarse – fine positioning scheme is common. One can employ a coarse-fine bearing stage, a coarse-fine actuation system [33], mechanical amplifiers [35-36], and even a coarse-fine sensor arrangement.

The design of multi DOF motion systems becomes quite challenging, because the interaction between the components of the various axes in the system results in conflicting requirements being imposed on the flexure bearing design, as well as on the choice of actuators and sensors. These conflicts in requirements and their consequences on performance shall be discussed in Chapter 2.

There are two well-known configurations employed in the design of multi DOF flexure bearing stages – serial kinematics and parallel kinematics. Each configuration has its own set of pros and cons. In serial design, multiple DOF are achieved by stacking single DOF systems, one on other. The technical literature presents several such designs, where this stacking is done either out-of-plane [37-39] or in-plane [40-42]. Serial kinematic mechanisms are relatively simple to design, and have substantially decoupled degrees of freedom, but at the same time incorporate moving actuators and cables that limit the dynamic performance. Moving cables are sources of disturbance, which is detrimental for nanometric positioning. Moving actuators, specially when large range of motion is desired, are bulky and reduce the bandwidth of the axes that carry them. Furthermore, moving actuators and connections are also undesirable for flexure mechanisms used in MEMS applications due to fabricability reasons. Parallel kinematic designs [43-58] are free of these problems due to ground mounted actuators, and are also usually more compact, but on the other hand, provide smaller ranges of motion and exhibit significant cross-axis coupling. Furthermore, the stiffness of one axis varies with motion or force along the other axes. This affects the static as well as dynamic performance of the mechanism.

Most serial and parallel mechanisms do not follow a formal design procedure in their topological conception. As mentioned already, serial designs are usually constructed by stacking single DOF stages. Parallel designs, on the other hand, are constructed by adding the necessary number of constraints to achieve the desired DOF. Such a construction of parallel kinematic mechanisms limits the range of motion, for reasons explained in Chapter 2. Figures 1.3 and 1.4 illustrate typical examples of each kind.

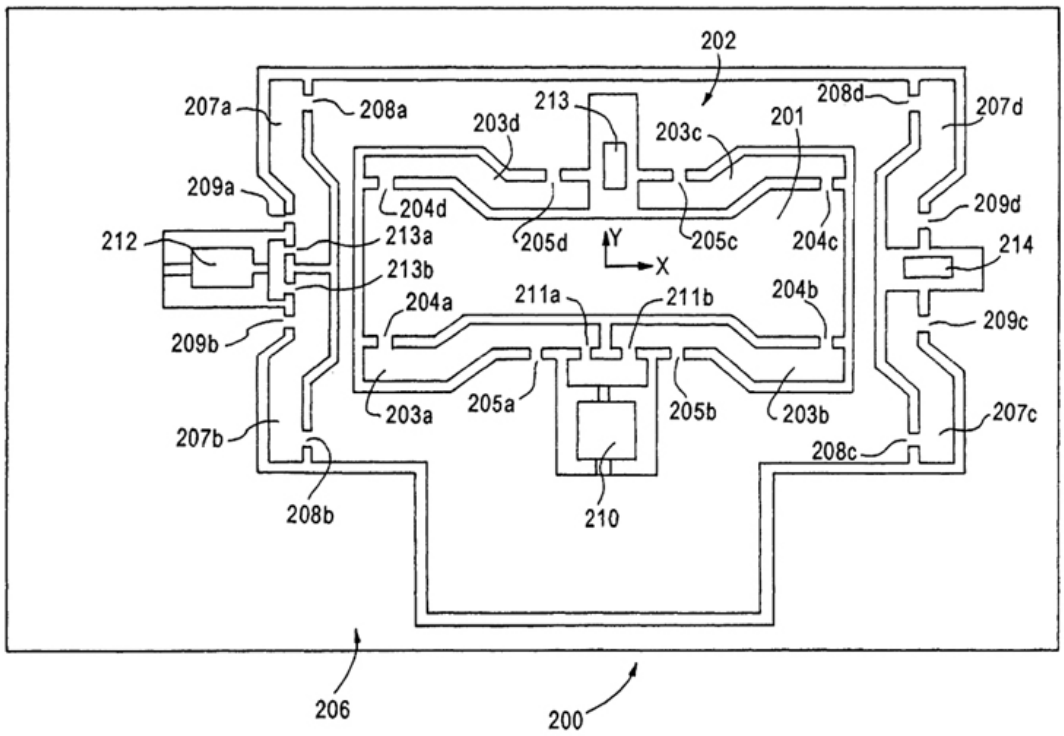

Fig.1.3 A Two DOF (X-Y) Serial Mechanism [45]

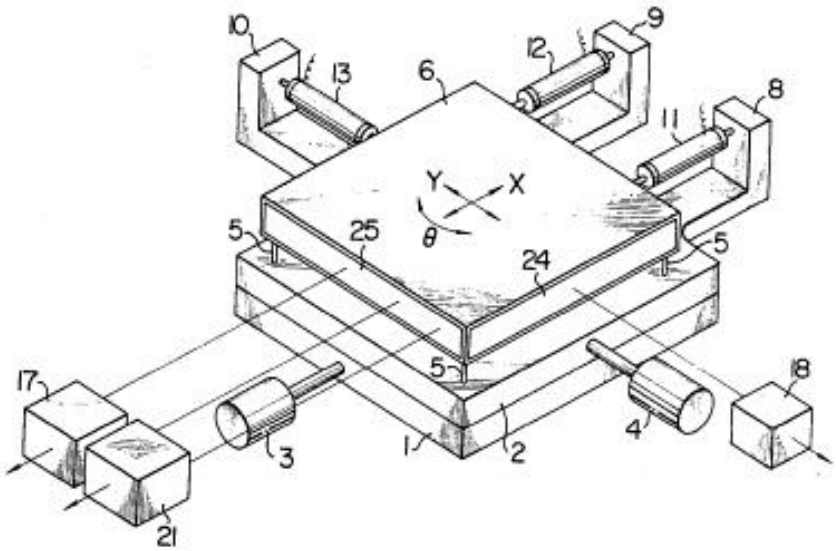

Fig. 1.4 A Three DOF (XYθ) Parallel Mechanism [51]

1.4 Contributions

Summarizing the above discussions, the metrics that influence the static and dynamic performance of flexure mechanisms, and are important considerations in mechanism design, include

a) Range of motion and failure limits
b) Degrees of Freedom, Degrees of Constraint and over-constraint
c) Undesirable motions including parasitic errors and cross-axis coupling errors
d) Variation in stiffness along DOF and DOC due to a forces and/or displacements
e) Thermal sensitivity
f) Manufacturing sensitivity

If designed for motion control, some other factors that are of concern are

g) Hysteresis and creep
h) Choice of sensors and actuators
i) Damping of critical vibration modes
j) Choice of control strategy

These performance measures and design considerations shall be explained in more detail in the subsequent chapters, and it will also become apparent that several tradeoffs exist between these factors.

As indicated earlier, existing flexure mechanism design approaches fall under two distinct categories. There is a traditional approach that is based on creative thinking and intuition. While this approach has resulted in several new topologies, it has earned the reputation of being a black art. Due to the lack of an analytical basis and a systematic approach, only a percentage of the designs that are thus conceived have acceptable performance. On the other hand, there are approaches that have a mathematical foundation, but allow for little creative inputs from the designer, resulting in few new designs. If one thinks about the problem in terms of genetics, the first approach is an analog of mutation, whereas the latter approach loosely represents cross-over. While each method has its strengths, by themselves they have proved to be inadequate in terms of being able to address the concerns listed above.

This thesis strives to bridge the gap between intuition and mathematical analysis in flexure mechanism design. Based on an understanding of the challenges involved in multi DOF flexure mechanism design, it proposes several new XY mechanisms with large ranges of motion, and provides a performance evaluation of each variant. This thesis also presents simple analytical tools that aid the intuition of a design engineer – tools that can be used to quickly and accurately estimate the stiffness of a mechanism in various directions, that can help identify over-constraining arrangements, that can be used to estimate error motions in a mechanism, validate the role of symmetry in design, and at the same time provide parametric understanding of the design space.

Arguments based on intuition and symmetry can indeed be used in many a cases to answer performance related questions without resorting to analysis. This is illustrated in Fig 1.5 by posing the following simple question – Where should a transverse load be applied to a uniform beam so as to produce zero rotation between the two ends? Rigid extension arms are attached to the two ends of the beam so that both transverse forces and moments may be applied without having to show the moments explicitly. The forces applied on each arm need to balance out and therefore are equal and opposite.

Intuition tells us that the transverse force should be applied at the mid-span of the beam to ensure zero slope between the two ends. This intuition is not baseless and is easily validated by symmetry arguments. Referring to Fig. 1.5B, where the load has been applied along the mid-line, consider a hypothetical deformed configuration of the beam such that the relative angle between the ends is not zero. Now flip this picture about Axis 1, to obtain the picture of Fig. 1.5C, and then once again about Axis 2 to obtain the picture shown in Fig 1.5D. Comparing figures 1.5B and 1.5D, one can see that the geometry and the loading are identical. Therefore, by symmetry the deformations in two cases also have to be identical. Clearly, this will not be the case if there is a relative rotation between the two ends, and the only deformation that satisfies the requirements of symmetry is one in which the two ends remain parallel. Thus, we see that only a load applied along the mid-line will produce a zero slope.

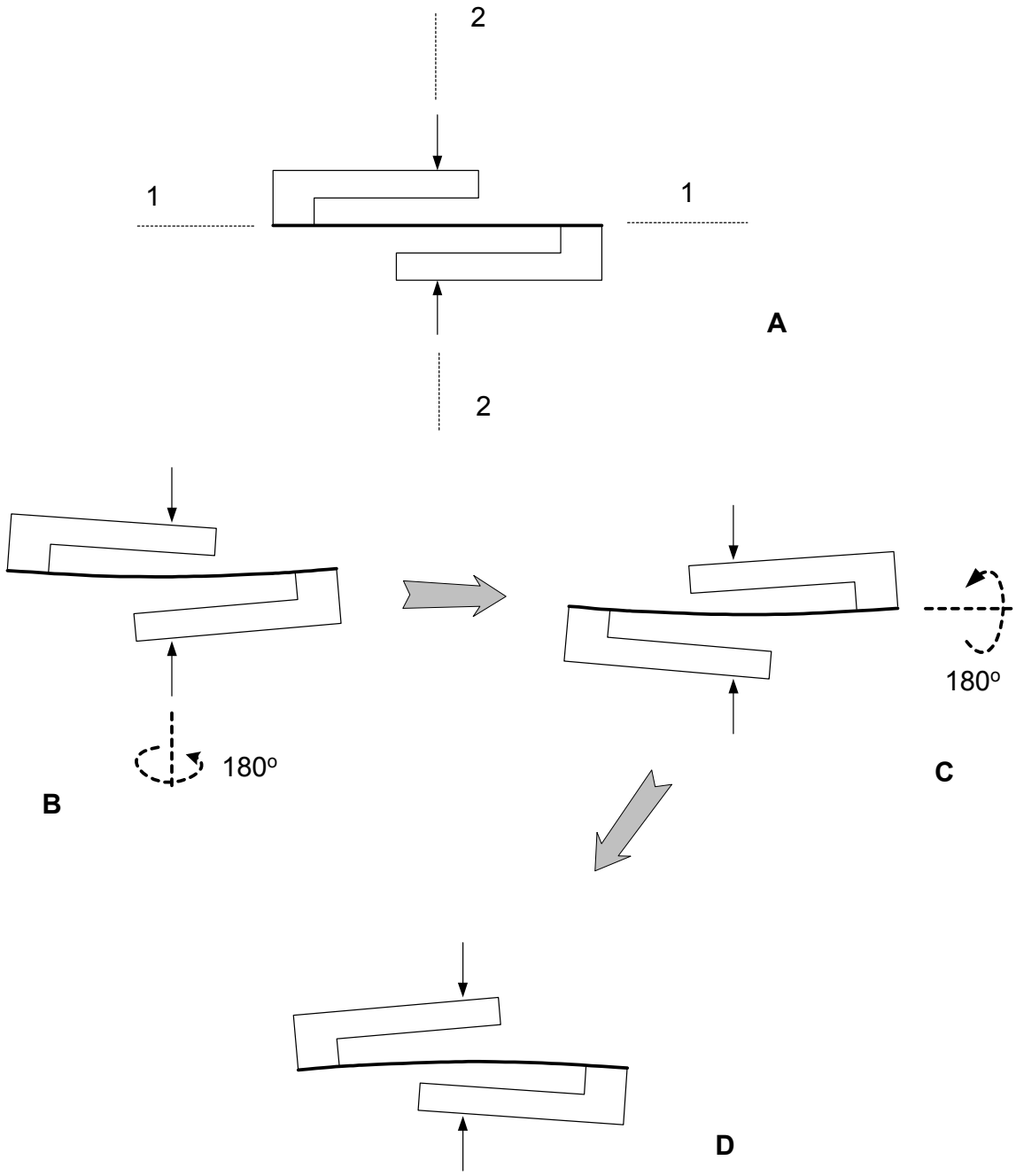

Fig. 1.5 Arguments of symmetry applied to a uniform beam

In fact, a symmetric S-shaped deformation with zero relative angle between the ends, passes the above test of symmetry. We are thus able to obtain an answer to our original question without involving the principles of solid mechanics, except force equilibrium, and irrespective of the constitutive properties of the material. Several variations of such symmetry based arguments may be used in many cases to obtain useful performance information. But as one adds further complexity to the problem, for example, apply an

axial load in the current case, the scenario changes. In the deformed configuration, one now has to add an additional moment due to the axial load, to satisfy force equilibrium. This additional moment results in a loss of loading symmetry, and the above arguments are no longer valid. It therefore becomes impossible to qualitatively determine the line of transverse force application that will produce a zero end slope.

Thus, we see that intuition is powerful and helps in design decisions, but only up to a certain extent, beyond which complexity in the system takes over. In such situations, mathematical analysis becomes a handy tool. The above example illustrates that both intuition as well as analysis are indispensable for design, and reflects the general flavor of this thesis.

Accordingly, the following list highlights the specific contributions of this thesis.

1) Several new parallel kinematic XY flexure mechanism designs are proposed based on a systematic and symmetric arrangement of flexure units, as opposed to the current methods of synthesis. This approach allows us to create flexure mechanisms in a deterministic fashion, and at the same time achieve impressive performance measures in terms of range of motion, cross-axis coupling and parasitic errors. Chapter 2 presents the XY mechanism designs, while Appendix A illustrates several other multiple DOF mechanisms.

2) A non-linear static analysis is presented to evaluate the proposed XY mechanism designs. The force-displacement characteristics of various flexure units are quantified, with specific consideration to the coupling effects between the displacements and forces along various directions. Chapters 3 presents the non-linear analysis of a uniform beam flexure, and based on several insightful engineering approximations, concludes with simplified symbolic results. These results allow us to analytically consider the concepts of mobility, error motions, variation in stiffness, center of stiffness, sensitivity to geometry and assembly, and generalization to other shapes. The application and limitations of energy principles in this context are also briefly discussed.

   Chapter 4 provides a similar analysis for two other common flexure units, namely, the parallelogram and double parallelogram flexures. In Chapter 5, some of the mechanism designs from Chapter 2 are comparatively evaluated for their performance.

3) The fabrication, assembly and experimental test step-up of an XY flexure stage, chosen on the basis of the above synthesis and analysis exercise, is presented in Chapter 6. Issues related to choice of material, manufacturing process, sensors and actuators are discussed. The experimental set-up is designed to be modular so that it can accommodate multiple sensors and actuators. A preliminary comparison is made between the two potential fabrication techniques: water-jet cutting and electric discharge machining. To achieve an assembly that is free of friction and backlash, a new clamping

mechanism that effectively holds the cylindrical actuator and cap-probes has been invented. In the design of the metrology set-up, a classic alignment problem has been revisited and is discussed in detail.

A comprehensive measurement and characterization of the XY stage that has been performed, and is presented in Chapter 7. Impressive performance results have been obtained, that match the analytical predictions. The prototype XY mechanism has an overall size of 300mm x 300mm x 25mm, and provides a 5mm x 5mm range of motion. Over this range of motion, cross axes errors of less than 1 part in 1000, and parasitic motion stage yaw of less than 3 arc seconds are recorded. A simple motion control design, which incorporates a closed-loop coarse actuator and open-loop fine actuator has been implemented to achieve 5nm positioning accuracy, which is currently limited by the resolution of the laser interferometer transducer.

There are several areas directly related to this work presented in this thesis that offer much scope for future work. These topics are briefly listed here.

1) Given the XY Flexure mechanism designs, a thorough dynamic system analysis and controls design is necessary to achieve motion control over a large bandwidth. The passive dynamics of the system in terms of its natural frequencies, mode shapes, and internal resonance conditions need to be analytically and experimentally determined. The problem of colocated and non-colocated controls in the presence of a variable drive stiffness needs to be addressed. Passive damping strategies that can provide dissipation over large frequency ranges are desirable. Hysteresis and creep associated with piezo-actuators commonly used in micro/nanopositioners need to be addressed.

2) Performance sensitivity to geometry and manufacturing/assembly tolerances is an important aspect of flexure mechanism design that needs further work.

3) This thesis deals with the generation of new topologies and resulting performance based on a standard blade flexure based building blocks. Size and shape optimization that allow for variations in the beam geometry, are the next steps in fine-tuning a given XY mechanism to tailor it for specific applications.

4) While the thermocentricity of some of the XY mechanisms has been empirically suggested, a thorough thermal analysis and subsequent validating experiments are desirable to check the sensitivity of the mechanisms to thermal disturbances.

In Appendix A, several other flexure mechanism designs are also presented that were conceived during this research. Although not thoroughly analyzed, these designs embody the concepts and philosophy followed in the rest of this thesis.